MOONS'

moving in better ways

L Series Linear Step Motors & Slides

Lead Screw Motors

- LE Series
  External Nut Type
- LN/LNSM Series
  Non-Captive Type
- LC Series
  Captive Shaft Type

Linear Slides

- MS Series
- CS Series

Stepper Drivers

- SR Series
- STF Series

• Quick Response • Design Flexibility • Stable Performance

Milestones

FEB. 2020	MOONS' Intelligent motion system India Private Limited was established in Pune.India
MAR. 2019	MOONS' Electric acquired Technosoft Motion AG
MAR. 2018	MOONS' Electric acquired Changzhou Yunkong Electronic CO., LTD.
MAY. 2017	AMP & MOONS' Automation (Germany) GmbH was officially registered in Frankfurt, Germany
MAY. 2017	MOONS' Electric was successfully listed on the Shanghai Stock Exchange
JUN. 2015	MOONS' acquired LIN ENGINEERING
MAY. 2015	MOONS' Electric and PBC Linear officially established Joint Venture
JUN. 2014	MOONS' acquired Applied Motion Products
OCT. 2013	MOONS' Industries Japan was established in Yokohama
JUN. 2010	MOONS' Industries (South-East Asia) Pte Ltd. was established in Singapore
SEP. 2009	MOONS' Industries (Europe) S.R.L was established in Milan, Italy
JAN. 2009	MOONS' Qingdao Branch Office opened
FEB. 2007	MOONS' established joint venture with Applied Motion Products and a driver company was set up
MAY. 2006	MOONS' new facility was built and factory relocation was completed
JAN. 2005	First LED Driver was introduced to the market
DEC. 2000	MOONS' Industries (America), Inc. was established in Chicago, USA
OCT. 2000	MOONS' Power Supply Factory was set up and production started
APR. 1998	MOONS' International Trading Company was established
FEB. 1998	MOONS' Motor Factory was set up and HB Stepper Motor production started
FEB. 1994	MOONS' was founded

Catalogue

L Series Linear Step Motors	**04**
LE : External Nut Type	**07**
Configuration Table	08
Standard Models for stock	12
LE08 Series (□20x20 mm)	13
LE11 Series (□28x28 mm)	16
LE14 Series (□35x35 mm)	20
LE17 Series (□42x42 mm)	24
LE23 Series (□57x57 mm)	29
Encoder Options	33
Brake Options	34
LN/LNSM : Non-captive Type	**36**
Configuration Table	37
Standard Models for stock	39
LN08 Series (□20x20 mm)	40
LN11/ LNSM11 Series (□28x28 mm)	42
LN14/ LNSM14 Series (□35x35 mm)	45
LN17/ LNSM17 Series (□42x42 mm)	48
LN23/ LNSM23 Series (□57x57 mm)	52
LC : Captive Type	**56**
Configuration Table	57
Standard Models for stock	58
LC08 Series (□20x20 mm)	59
LC11 Series (□28x28 mm)	61
LC14 Series (□35x35 mm)	63
LC17 Series (□42x42 mm)	65
LC23 Series (□57x57 mm)	68
Linear Slides (Lead Screws)	**71**
Application Information	72
Standard Models for stock	74
MS28 Series	75
MS35 Series	77
MS42 Series	79
CS35 Series	81
CS42 Series	83
Sensor Options	85
Stepper Drivers	**87**
SR Series	87
STF Series	90
How To Get Samples Quickly	**96**

L Series Linear Step Motors

MOONS' lead screw motor products are designed based on the know-how technology of hybrid step motors, lead screw and nuts. The L Series lead screw motors provide high torque, high precision, and high efficiency to fit the application needs of designers. The combination of lead screw motor styles, sizes, lead-screws and nuts, gives the freedom to use motors of different form factors to exactly fit in the application. And, it provides the best performance with any drive and power supply.

- 3 structure types available
- 5 frame sizes: NEMA08/11/14/17/23
- Each frame size has multiple motor length options
- Integrate any lead screw and nut from moons'
- Standardized product models for quick response

MOONS' has committed to product innovation design and technical improvement, with excellent product quality, application technology, fast and flexible services, which provide customers with high level motion control solutions.

Structure Types

External Nut - Leadscrew Shaft

Non-Captive Shaft

Linear Captive Shaft

MOONS' Technology

PowerPlus Technology

MOONS' PowerPlus technology provides 25% to 40% more torque across the entire speed range of the motor. The increased torque is a result of higher motor efficiency, and is available without increasing the drive voltage or current.

Conventional Motor

Some of the torque producing magnetic flux that links the rotor to the stator is outside the stator teeth. This stray flux adds little to motor torque.

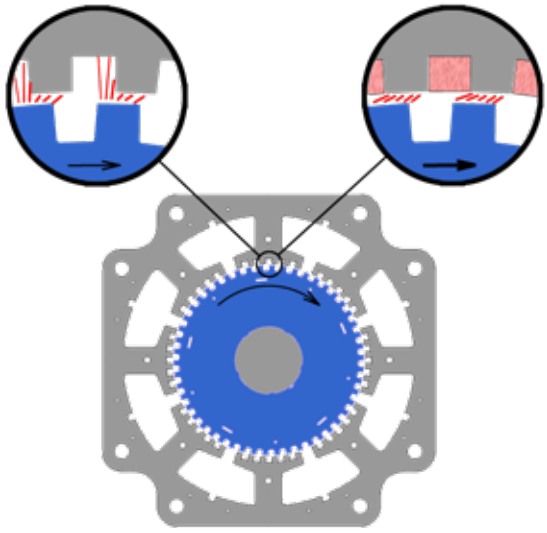

PowerPlus Technology

Magnets placed between the stator teeth redirect most of the stray magnetic flux into the stator teeth. This produces additional torque with the same input power.

Constant Force Technology

Constant Force™ Anti-Backlash Nut

An intuitive leap forward in nut design for lead screw applications,Constant Force Technology utilizes a constant force spring to apply a uniform pressure to the nut at all stages of the motion profile.

- Greater consistency and resistance to backlash
- Configurable for various torque requirements
- Contant Force™ anti-backlash feature
- Polymer nuts are self-lubricating and maintenance free

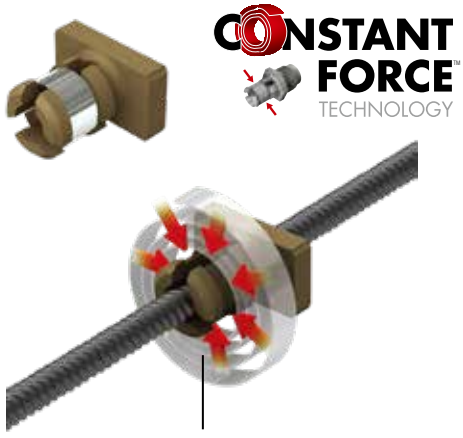

Pending Constant Force Technology nut provides consistent anti-backlash operation

MOONS' Technology

Integrated solution

MOONS' has provided multiple integrated solutions to fit the application needs of designers, such as: encoder integrated type, brake integrated type and step-servo type (drive, encoder, controller and lead screw motor integrated).

Encoder Integrated Type

Brake Integrated Type

Step-servo Type

LE : External Nut Type

LE series (External Nut Type) is a type of linear step motor which makes a lead screw integrated with the motor to become the motor shaft and the nut is external to the motor. As the motor rotates, the nut moves linearly along the lead screw.

- 5 frame sizes: NEMA08/11/14/17/23
- Each frame size has multiple motor length options
- Integrate any lead screw and nut from moons'
- Standard or anti-backlash nut option
- Standardized product models for quick response

The series lead screw motors provide high torque, high precision, and high efficiency to fit the application needs of designers. The combination of lead screw motor styles, sizes, lead-screws and nuts, gives the freedom to use motors of different form factors to exactly fit in the application. And, it provides the best performance with any drive and power supply.

■Numbering System

LE	174S	–	T0808	–	100	–	AR1	–	S	–	XXX
①	②		③		④		⑤		⑥		⑦
Series	Motor type		Lead screw type		Screw length (mm)		Nut type		Customized Code S=Screw End Machining		Rated Current XXX=X.XX(A)

LE Series Configuration Table (Metric Screw)

Nominal Diameter (mm)	Lead (mm)	Lead Screw Code	LE080K	LE081K	LE081S	LE111S	LE113S	LE115S
3.5	1	M3501	◎	◎	◎			
5	1	M0501				◎	◎	◎
	5	M0505				◎	◎	◎
6	1	W0601				◎	◎	◎
	2	M0602				◎	◎	◎
6.5	3	T6503				◎	◎	◎
8	1	T0801						
	1.25	T08012						
	3	T0803						
	4	T0804						
	5	T0805						
	8	T0808						
	12	T0812						
	20	T0820						
10	1	M1001						
	2	M1002						
	4	M1004						
	10.5	T10105						
12	2	T1202						
	6	T1206						
14	4	T1404						

Note: 1.Marked with " ◎ " is available,for more configurations please contact with MOONS'.
2.The table shown is standard leadscrew options,for PTFE Coating screw please contact with MOONS'.

Motor Options										
LE141A	LE141S	LE143S	LE174A	LE174S	LE172S	LE176S	LE234S	LE238S	LE23AS	LE23ASP
◎	◎	◎								
◎	◎	◎								
◎	◎	◎								
◎	◎	◎	◎	◎	◎	◎				
◎	◎	◎	◎	◎	◎	◎				
◎	◎	◎	◎	◎	◎	◎				
◎	◎	◎	◎	◎	◎	◎				
◎	◎	◎	◎	◎	◎	◎				
◎	◎	◎	◎	◎	◎	◎				
◎	◎	◎	◎	◎	◎	◎				
			◎	◎	◎	◎	◎	◎	◎	◎
			◎	◎	◎	◎	◎	◎	◎	◎
			◎	◎	◎	◎	◎	◎	◎	◎
			◎	◎	◎	◎	◎	◎	◎	◎
							◎	◎	◎	◎
							◎	◎	◎	◎
							◎	◎	◎	◎

LE Series Configuration Table (Inch Screw)

Nominal Diameter		Lead	Lead Screw Code							
inch	mm	inch		LE080K	LE081K	LE081S	LE111S	LE113S	LE115S	
0.138	3.51	0.024	E03006	◎	◎	◎				
		0.048	E03012	◎	◎	◎				
		0.096	E03024	◎	◎	◎				
0.188	4.78	1/40	E04006	◎	◎	◎	◎	◎	◎	
		1/20	E04012	◎	◎	◎	◎	◎	◎	
		1/10	E04025	◎	◎	◎	◎	◎	◎	
0.218	5.54	0.024	E05006				◎	◎	◎	
		0.048	E05012				◎	◎	◎	
		0.192	E05048				◎	◎	◎	
0.25	6.35	1/32	E06008				◎	◎	◎	
		1/16	E06016				◎	◎	◎	
		0.096	T06024				◎	◎	◎	
		1/8	E06032				◎	◎	◎	
		1/4	E06063				◎	◎	◎	
		0.333	E06085				◎	◎	◎	
		0.384	E06097				◎	◎	◎	
		1/2	E06127				◎	◎	◎	
0.375	9.53	1/16	E09015							
		1/10	E09025							
		1/5	E09050							
		2/5	E09102							
0.472	11.99	1	E12254							

Note: 1.Marked with " ◎ " is available,for more configurations please contact with MOONS'.
2.The table shown is standard leadscrew options,for PTFE Coating screw please contact with MOONS'.
3. 1 inch=25.4 mm

Motor Options										
LE141A	LE141S	LE143S	LE174A	LE174S	LE172S	LE176S	LE234S	LE238S	LE23AS	LE23ASP
◎	◎	◎	◎	◎	◎	◎				
◎	◎	◎	◎	◎	◎	◎				
◎	◎	◎	◎	◎	◎	◎				
◎	◎	◎	◎	◎	◎	◎				
◎	◎	◎	◎	◎	◎	◎				
◎	◎	◎	◎	◎	◎	◎				
◎	◎	◎	◎	◎	◎	◎				
◎	◎	◎	◎	◎	◎	◎				
			◎	◎	◎	◎	◎	◎	◎	◎
			◎	◎	◎	◎	◎	◎	◎	◎
			◎	◎	◎	◎	◎	◎	◎	◎
			◎	◎	◎	◎	◎	◎	◎	◎
							◎	◎	◎	◎

LE Series Standard Models for stock

Size (mm)	Motor Series		Lead Screw Options		Screw Length Options		Nut Options		End Machining Code		Rated Current Options	Page
20X20	LE080K	-	E03006 E04025	-	30, 40, 50, 60, 70, 80, 90, 100, 110, 120,130, 140, 150	-	AR0	- -	S	-	040	P13
	LE081K	-	E03006 E04025		30, 40, 50, 60, 70, 80, 90, 100, 110, 120,130, 140, 150	-	AR0	- -	S	-	040	
28X28	LE111S	-	W0601 T6503 E06063 E06127	-	50, 60, 70, 80, 90, 100, 110, 120, 130, 140, 150, 160, 170, 180, 190, 200	-	AR1	-	S	-	050, 100	P16
	LE115S	-	W0601 T6503 E06063 E06127	-	50, 60, 70, 80, 90, 100, 110, 120, 130, 140, 150, 160, 170, 180, 190, 200	-	AR1	-	S	-	100	
35X35	LE141S	-	W0601 T6503 E06063 E06127	-	50, 60, 70, 80, 90, 100, 110, 120, 130, 140, 150, 160, 170, 180, 190, 200	-	AR1	-	S	-	100	P20
	LE143S	-	W0601 T6503 E06063 E06127	-	50, 60, 70, 80, 90, 100, 110, 120, 130, 140, 150, 160, 170, 180, 190, 200	-	AR1	-	S	-	050, 150	
42X42	LE174S	-	T08012 T0804 T0808	-	50, 60, 75, 90, 100, 110, 125, 140, 150, 160, 175, 190, 200, 210, 225, 240, 250, 260, 275, 290, 300	-	AR3	-	S	-	065,150	P24
	LE172S	-	T08012 T0804 T0808	-	50, 60, 75, 90, 100, 110, 125, 140, 150, 160, 175, 190, 200, 210, 225, 240, 250, 260, 275, 290, 300	-	AR3	-	S	-	100,200	
	LE176S	-	T08012 T0804 T0808 T10105	-	50, 60, 75, 90, 100, 110, 125, 140, 150, 160, 175, 190, 200, 210, 225, 240, 250, 260, 275, 290, 300	-	AR3 AR2	-	S	-	100,200	
57X57	LE234S	-	T1202 T1206 T10105 E12254	-	100, 125, 150, 175, 200, 225, 250, 275, 300, 325, 350, 375, 400	-	AR2 AR6	-	S	-	210	P29
	LE238S	-	T1202 T1206 T10105 E12254	-	100, 125, 150, 175, 200, 225, 250, 275, 300, 325, 350, 375, 400	-	AR2 AR6	-	S	-	220	
	LE23AS	-	T1202 T1206 T10105 E12254	-	100, 125, 150, 175, 200, 225, 250, 275, 300, 325, 350, 375, 400	-	AR2 AR6	-	S	-	150, 300	

Order sample

① Select configuration codes

Motor Series		Lead Screw Options		Screw Length Options		Nut Options		End Machining Code		Rated Current Options
LE111S	-	W0601	-	50, 60, 70, 80, 90, 100, 110, 120, 130, 140, 150, 160, 170, 180, 190, 200	-	AR1	-	S	-	050, 100

② Determine the order Models

LE111S - W0601 - 100 - AR1 - S - 050

In addition to the standard order Models, we also provide a wealth of customized configuration options, for more information please contact the factory.

LE08 Series

Phases	2
Step Accuracy	±5%
Approvals	RoHS
Insulation Class	B(130°C)
Operating Temp.	0°C~+50°C

■ Ordering Information

LE 08 0K – E03006 – 100 – AR0 – 0 – XXX

Lead Screw Motor Type Code

Code	Structure Type
LE	External Nut Type

Frame Size Code

Code	Frame Size
08	20mm

Motor Body Length Code

Code	Motor Body Length Max(mm)	Step Angle (°)
0K	20	1.8
1K	27	
1S	30	

Lead Screw Type Code

Code	Nominal Diameter (mm)	Lead (mm)	Travel(mm) Travel Per1.8°
M3501	3.5	1	0.005

Code	Nominal Diameter inch	Nominal Diameter mm	Lead inch	Travel(mm) Travel Per1.8°
E03006	0.138	3.51	0.024	0.0030*
E03012			0.048	0.0061*
E03024			0.096	0.0122*
E04006	0.188	4.78	1/40	0.0032*
E04012			1/20	0.0064*
E04025			1/10	0.0127*

The number with * is abbreviated.

Rated Current Code

XXX=X.XX(A)

Special Custom Type Code

Code	Custom Type
0	No end machining
S	Lead Screw End Machining
E	Add Encoder
XX	Other Special Custom Type

Nut Type Code

Code	Nut Type
AR0	Round Standard Nut
BR0	Round Anti-Backlash Nut
AT0	Triangular Standard Nut
BT0	Triangular Anti-Backlash Nut
CN	Custom Made Nut

The length of the screw Lx

###	Provided in 1 mm increments

Note:Choosing the standard order models can get the sample quickly, please see P12 for standard models.

LE08 Series

■ Motor Technical Parameters

Motor Type Code	Motor Body Length (mm)	Step Angle (°)	Electrical Connection	Rated Current (Amps)
LE080K	20	1.8	Leads	0.4
LE081K	27		Leads	0.4
LE081S	30		Plug In Connector	0.5

Note: Driver selection recommended P87-P94

■ Mating Connector With Leads (Only used for LE081S)

4 Lead Part Number4634 1402 03659

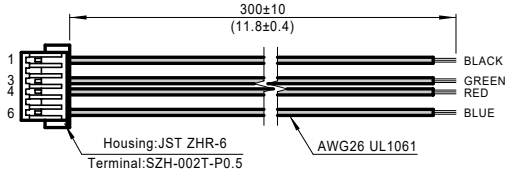

■ Nut Type

UNIT:mm

Round Standard Nut AR0

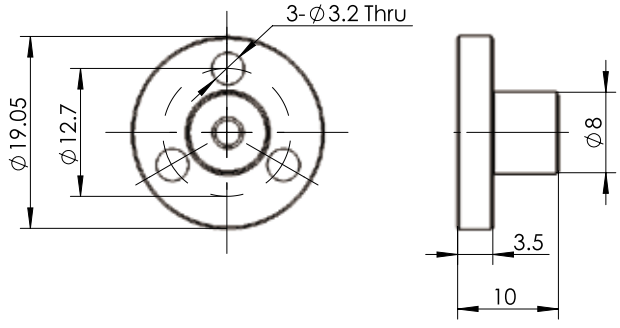

Triangular Standard Nut AT0

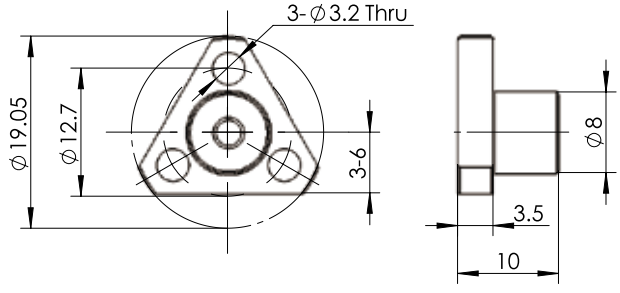

Round Anti-Backlash Nut BR0

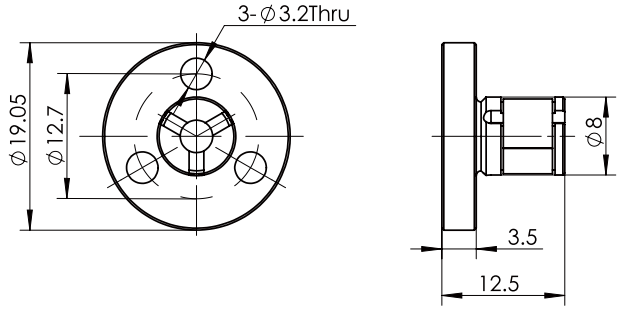

Triangular Anti-Backlash Nut BT0

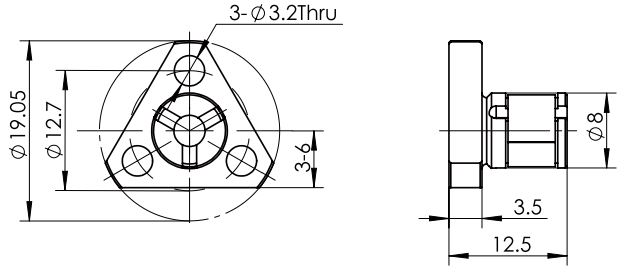

LE08 Series

■ Dimensional Information

UNIT:mm

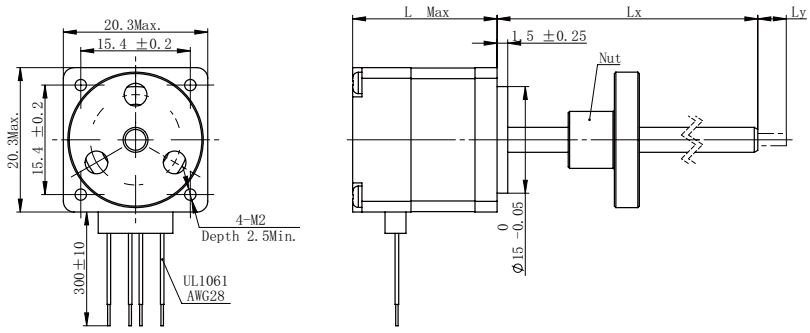

Motor Type	Dimension"L"
LE080K	20
LE081K	27

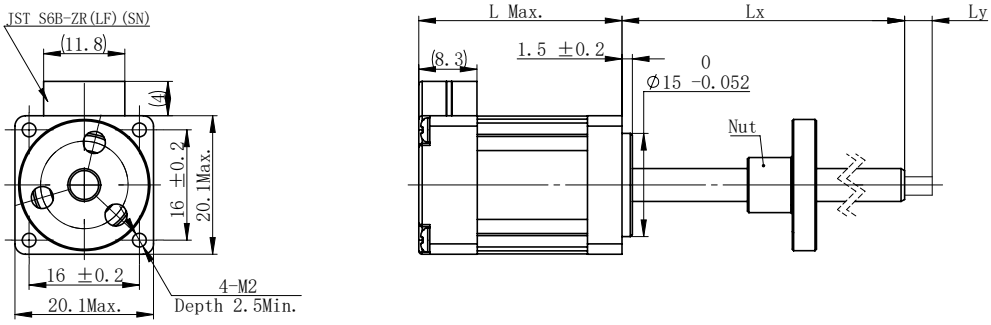

Motor Type	Dimension"L"
LE081S	30

■ Speed - Force Reference Curve

Note: The curves are reference values obtained by calculation. The actual output should consider the customer's unique application, including speed, acceleration and deceleration, frequency, stability of guidance mechanism, etc.

LE11 Series

Phases	2
Step Accuracy	±5%
Approvals	RoHS
Operating Temp.	0°C~+50°C
Insulation Class	B(130°C)

■ Ordering Information

LE 11 1S – W0601 – 100 – AR1 – 0 – XXX

Lead Screw Motor Type Code

Code	Structure Type
LE	External Nut Type

Frame Size Code

Code	Frame Size
11	28mm

Motor Body Length Code

Code	Motor Body Length Max(mm)	Step Angle (°)
1S	32	1.8
3S	41	
5S	52	

Lead Screw Type Code

Code	Nominal Diameter (mm)	Lead (mm)	Travel(mm) Travel Per1.8°
M0505	5	5	0.025
W0601	6	1	0.005
M0602		2	0.01
T6503	6.5	3	0.015

Code	Nominal Diameter inch	Nominal Diameter mm	Lead inch	Travel(mm) Travel Per1.8°
E04006	0.188	4.78	1/40	0.0032*
E04012			1/20	0.0064*
E04025			1/10	0.0127*
E05006	0.218	5.54	0.024	0.0030*
E05012			0.048	0.0061*
E05048			0.192	0.0244*
E06008	0.25	6.35	1/32	0.0039*
E06016			1/16	0.0080*
T06024			0.096	0.0122*
E06032			1/8	0.0159*
E06063			1/4	0.0318*
E06085			0.333	0.0423*
E06127			1/2	0.0635

The number with * is abbreviated.

Rated Current Code

XXX=X.XX(A)

Special Custom Type Code

Code	Custom Type
0	No end machining
S	Lead Screw End Machining
E	Add Encoder
B	Add Brake
XX	Other Special Custom Type

Nut Type Code

Code	Nut Type	Mating Lead Screw
AR0	Round Standard Nut	E04006 E04012 E04025 M0505
BR0	Round Anti-Backlash Nut	
AT0	Triangular Standard Nut	
BT0	Triangular Anti-Backlash Nut	
AR1	Round Standard Nut	E05006 E05012 E05048 E06008 E06016 T06024 E06032 E06063 E06085 E06127 W0601 M0602 T6503
BR1	Round Anti-Backlash Nut	
AT1	Triangular Standard Nut	
BT1	Triangular Anti-Backlash Nut	
CN	Custom Made Nut	

The length of the screw Lx

###	Provided in 1 mm increments

Note:Choosing the standard order models can get the sample quickly, please see P12 for standard models.

LE11 Series

■ Motor Technical Parameters

Motor Type Code	Motor Body Length (mm)	Step Angle (°)	Electrical Connection	Rated Current (Amps)
LE111S	32	1.8	Plug In Connector	0.5
				0.67
				1
LE113S	41		Plug In Connector	0.95
LE115S	52		Plug In Connector	1

Note: Driver selection recommended P87-P94

■ Mating Connector With Leads

4 Lead Part Number 4634 1402 04190

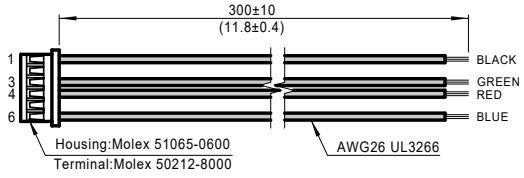

■ Nut Type

UNIT:mm

Round Standard Nut AR0

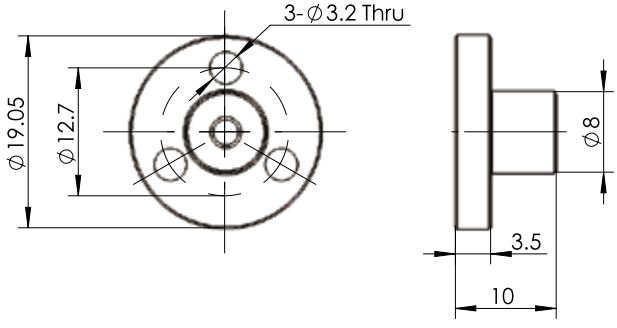

Triangular Standard Nut AT0

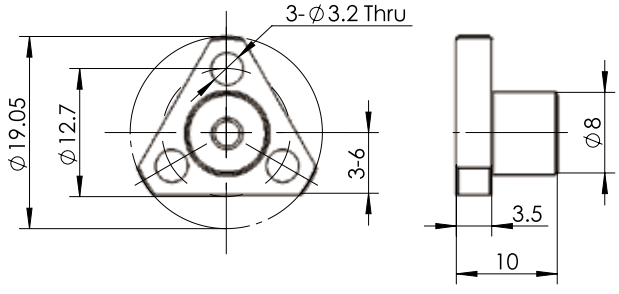

LE11 Series

Round Anti-Backlash Nut BR0

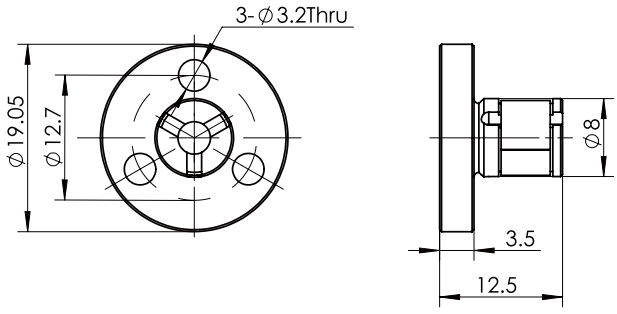

Triangular Anti-Backlash Nut BT0

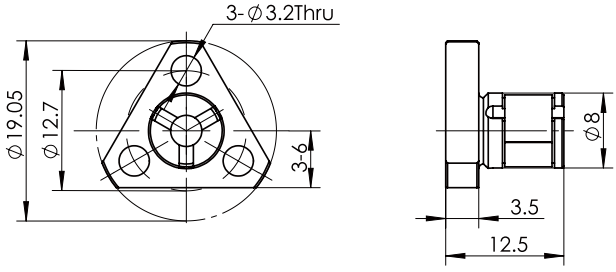

Round Standard Nut AR1

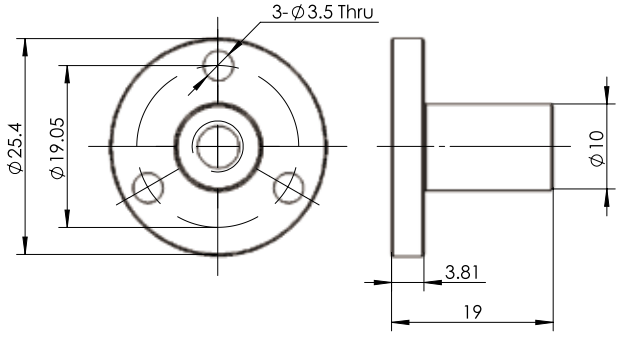

Triangular Standard Nut AT1

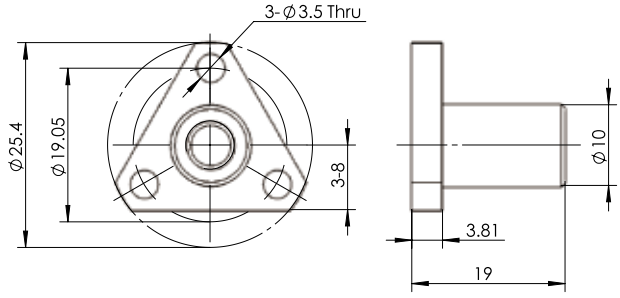

Round Anti-Backlash Nut BR1

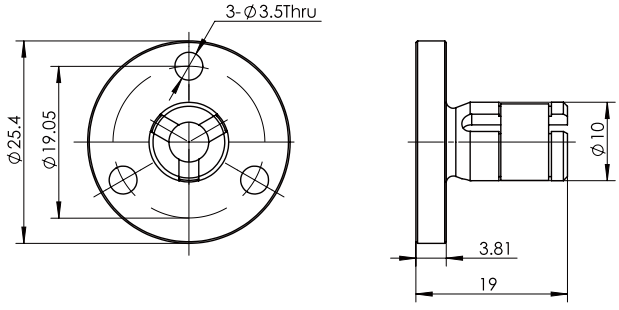

Triangular Anti-Backlash Nut BT1

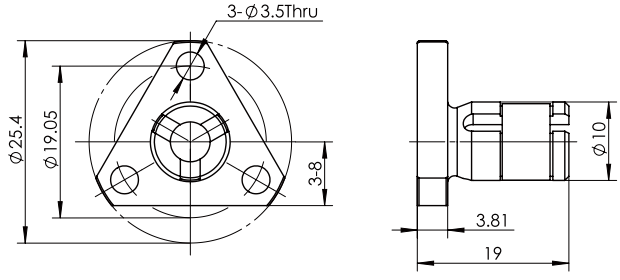

LE11 Series

■ Dimensional Information

UNIT:mm

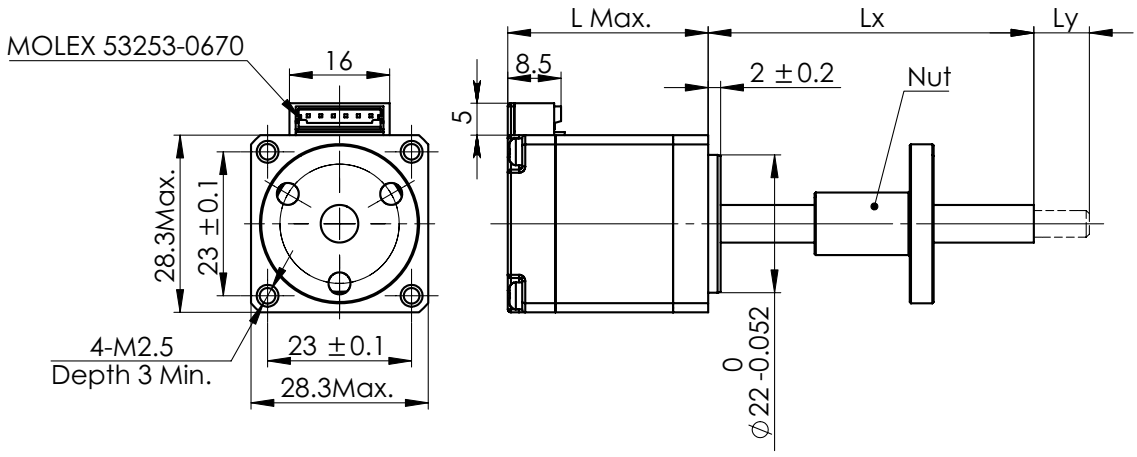

Motor Type	Dimension"L"
LE111S	32
LE113S	41
LE115S	52

■ Speed - Force Reference Curve

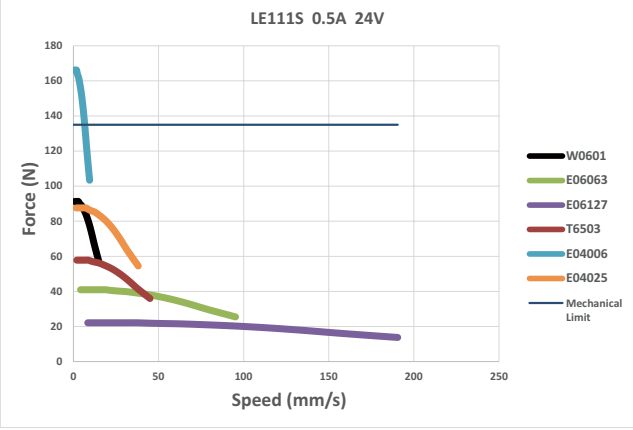

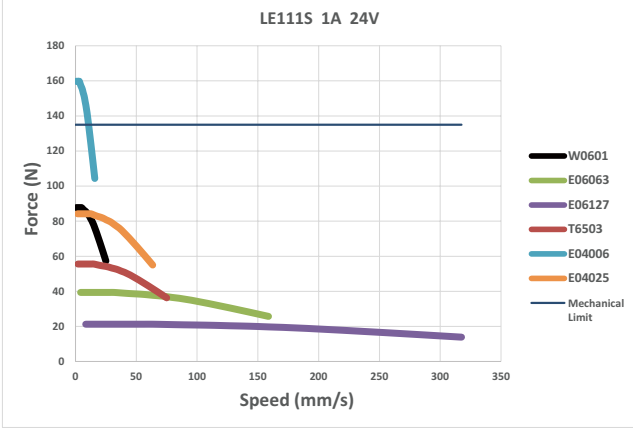

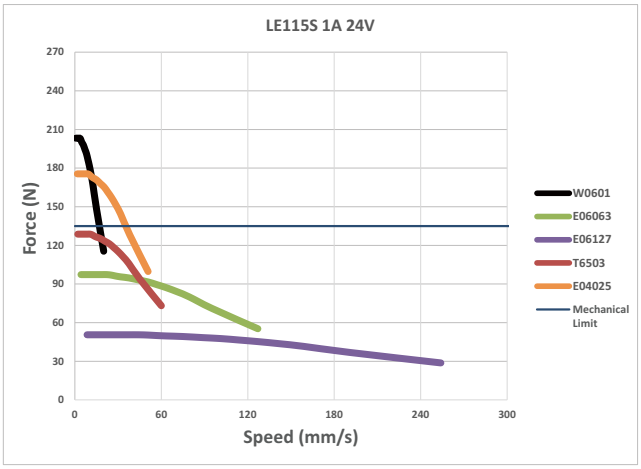

Note:

1.Mechanical Limit Definition：
Since the motor output may exceed the force which the bearing can bear, so we take the motor bearing limit as the mechanical limit. However, linear motor fatigue and resultant life are determined by each customer's unique application. Load, speed, frequency, temperature, stability of guidance mechanism, etc., should all be considered before choosing a linear motor.

2.The curves are reference values obtained by calculation. The actual output should consider the customer's unique application, including speed, acceleration and deceleration, frequency, stability of guidance mechanism, etc.

LE14 Series

Phases	2
Step Accuracy	±5%
Approvals	RoHS
Operating Temp.	0°C~+50°C
Insulation Class	B(130°C)

Ordering Information

LE 14 1S – W0601 – 100 – AR1 – 0 – XXX

Lead Screw Motor Type Code

Code	Structure Type
LE	External Nut Type

Frame Size Code

Code	Frame Size
14	35mm

Motor Body Length Code

Code	Motor Body Length Max(mm)	Step Angle (°)
1A	28	0.9
1S	27	1.8
3S	35	

Lead Screw Type Code

Code	Nominal Diameter (mm)	Lead (mm)	Travel(mm)	
			Travel Per0.9°	Travel Per1.8°
W0601	6	1	0.0025	0.005
M0602		2	0.005	0.01
T6503	6.5	3	0.0075	0.015
T0801	8	1	0.0025	0.005
T08012		1.25	0.0031*	0.0063*
T0803		3	0.0075	0.015
T0804		4	0.01	0.02
T0805		5	0.0125	0.025
T0808		8	0.02	0.04
T0812		12	0.03	0.06
T0820		20	0.05	0.1

Code	Nominal Diameter		Lead	Travel(mm)	
	inch	mm	inch	Travel Per0.9°	Travel Per1.8°
E06008	0.25	6.35	1/32	0.0020*	0.0039*
E06016			1/16	0.0040*	0.0080*
T06024			0.096	0.0061*	0.0122*
E06032			1/8	0.0079*	0.0159*
E06063			1/4	0.0159*	0.0318*
E06085			0.333	0.0211*	0.0423*
E06127			1/2	0.0318	0.0635

The number with * is abbreviated.

Rated Current Code

XXX=X.XX(A)

Special Custom Type Code

Code	Custom Type
0	No end machining
S	Lead Screw End Machining
E	Add Encoder
B	Add Brake
XX	Other Special Custom Type

Nut Type Code

Code	Nut Type	Mating Lead Screw	
AR1	Round Standard Nut	E06008 E06016 T06024 E06032 E06063 E06085	E06127 W0601 M0602 T6503
BR1	Round Anti-Backlash Nut		
AT1	Triangular Standard Nut		
BT1	Triangular Anti-Backlash Nut		
AR3	Round Standard Nut	T0801 T08012 T0803 T0804	T0805 T0808 T0812 T0820
BR3	Round Anti-Backlash Nut		
AT3	Triangular Standard Nut		
BT3	Triangular Anti-Backlash Nut		
CN	Custom Made Nut		

The length of the screw Lx

###	Provided in 1 mm increments

Note:Choosing the standard order models can get the sample quickly, please see P12 for standard models.

LE14 Series

■ Motor Technical Parameters

Motor Type Code	Motor Body Length (mm)	Step Angle (°)	Electrical Connection	Rated Current (Amps)
LE141A	28	0.9	Plug In Connector	0.6
LE141S	27	1.8	Plug In Connector	0.7
				1
LE143S	35		Plug In Connector	0.5
				0.75
				1
				1.5

Note: Driver selection recommended P87-P94

■ Mating Connector With Leads

4 Lead Part Number 4634 1402 04581

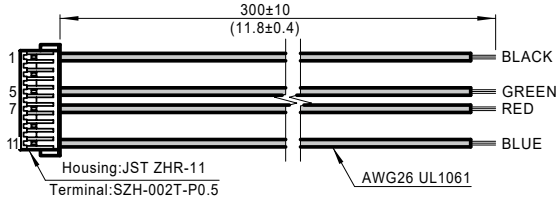

■ Nut Type

UNIT:mm

Round Standard Nut AR1

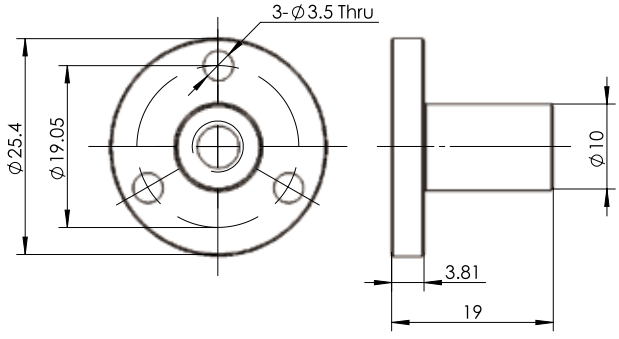

Triangular Standard Nut AT1

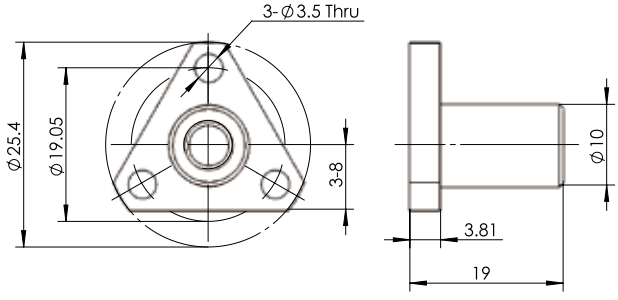

LE14 Series

Round Anti-Backlash Nut BR1

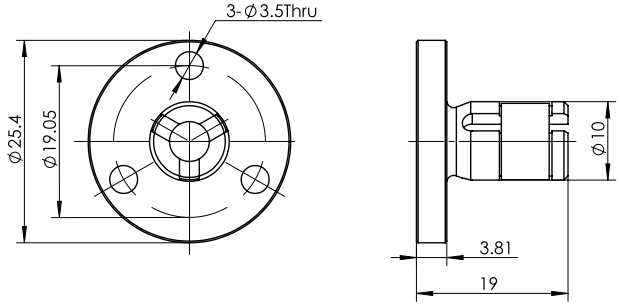

Triangular Anti-Backlash Nut BT1

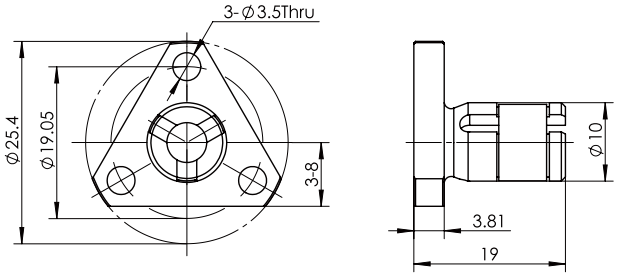

Round Standard Nut AR3

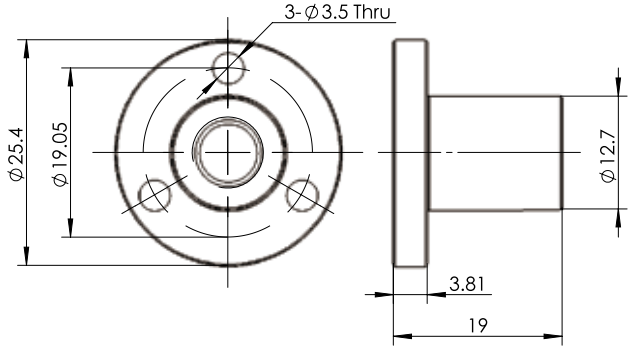

Triangular Standard Nut AT3

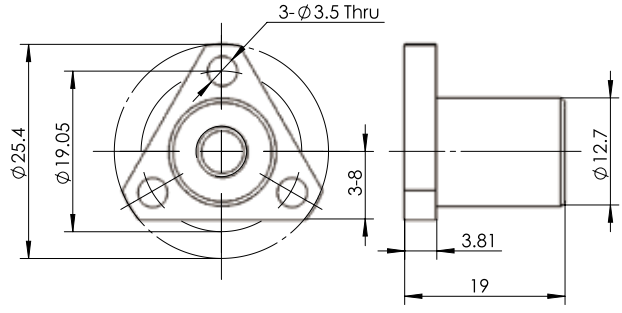

Round Anti-Backlash Nut BR3

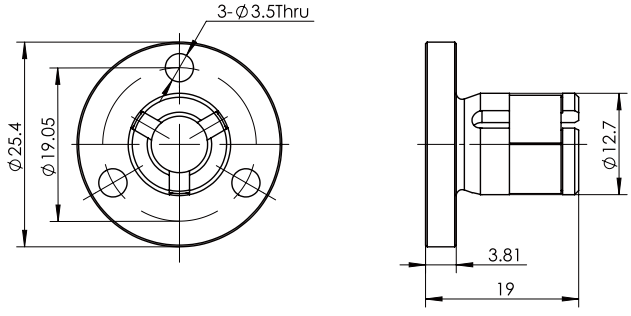

Triangular Anti-Backlash Nut BT3

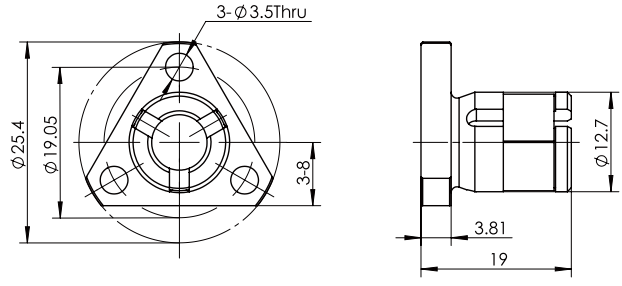

LE14 Series

■ Dimensional Information

UNIT:mm

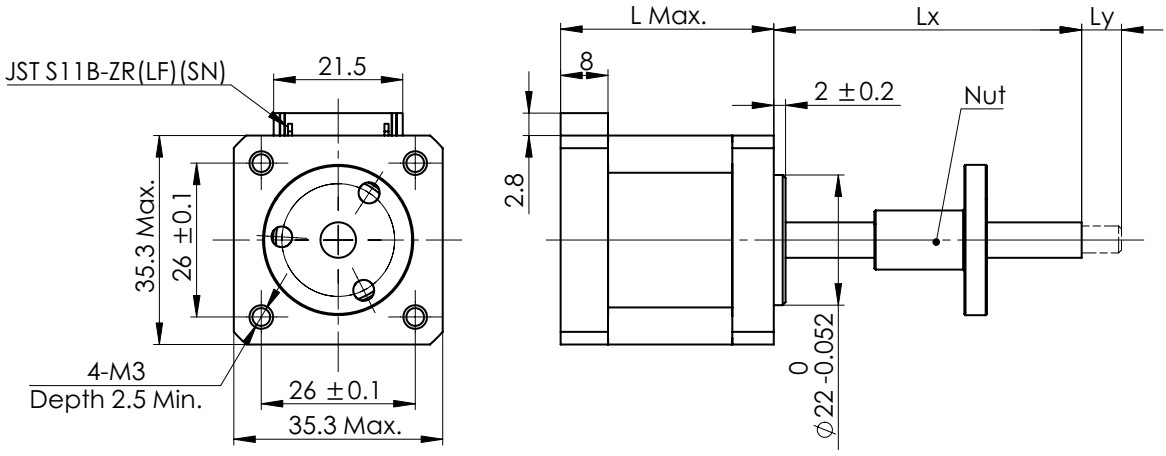

Motor Type	Dimension"L"
LE141A	28
LE141S	27
LE143S	35

■ Speed - Force Reference Curve

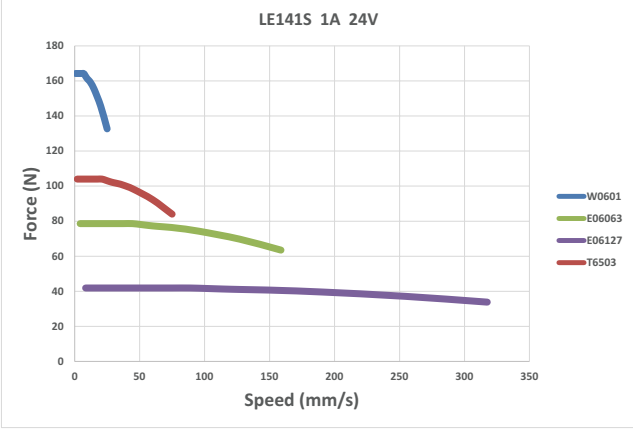

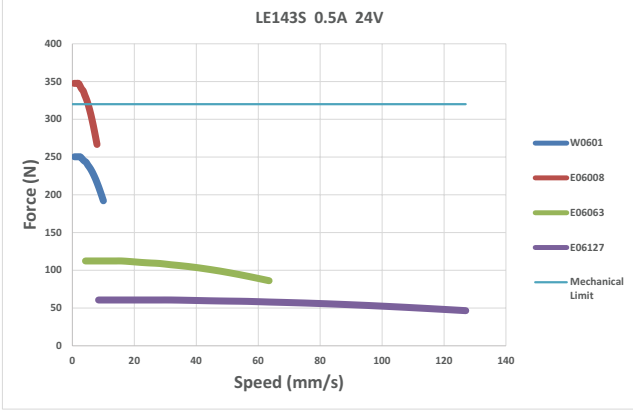

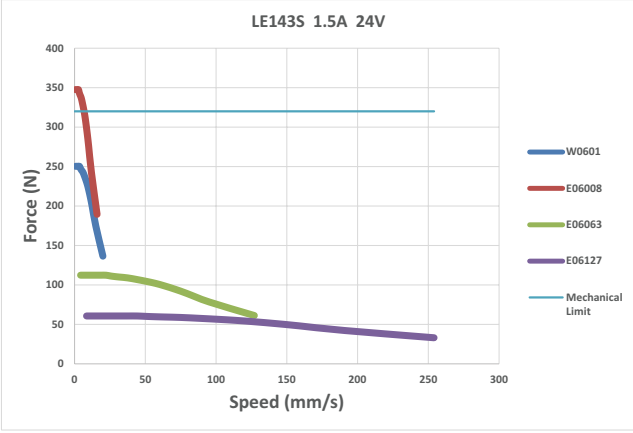

Note:

1.Mechanical Limit Definition：
Since the motor output may exceed the force which the bearing can bear, so we take the motor bearing limit as the mechanical limit. However, linear motor fatigue and resultant life are determined by each customer's unique application. Load, speed, frequency, temperature, stability of guidance mechanism, etc., should all be considered before choosing a linear motor.

2.The curves are reference values obtained by calculation. The actual output should consider the customer's unique application, including speed, acceleration and deceleration, frequency, stability of guidance mechanism, etc.

LE17 Series

Phases	2
Step Accuracy	±5%
Approvals	RoHS
Operating Temp.	0°C~+50°C
Insulation Class	B(130°C)

■ Ordering Information

LE 17 2S – T0801 – 100 – AR1 – 0 – XXX

Lead Screw Motor Type Code

Code	Structure Type
LE	External Nut Type

Frame Size Code

Code	Frame Size
17	42mm

Motor Body Length Code

Code	Motor Body Length Max(mm)	Step Angle (°)
4A	34	0.9
7S	20	1.8
4S	34	
2S	40	
6S	48	

Lead Screw Type Code

Code	Nominal Diameter (mm)	Lead (mm)	Travel(mm) Travel Per0.9°	Travel(mm) Travel Per1.8°
T0801	8	1	0.0025	0.005
T08012		1.25	0.0031	0.0063
T0803		3	0.0075	0.015
T0804		4	0.01	0.02
T0805		5	0.0125	0.025
T0808		8	0.02	0.04
T0812		12	0.03	0.06
T0820		20	0.05	0.1
M1001	10	1	0.0025	0.005
M1002		2	0.005	0.01
M1004		4	0.01	0.02
T10105		10.5	0.0263*	0.0525*

Code	Nominal Diameter inch	Nominal Diameter mm	Lead inch	Travel(mm) Travel Per0.9°	Travel(mm) Travel Per1.8°
E06008	0.25	6.35	1/32	0.0020*	0.0039*
E06016			1/16	0.0040*	0.0080*
T06024			0.096	0.0061*	0.0122*
E06032			1/8	0.0079*	0.0159*
E06063			0.250	0.0159*	0.0318*
E06085			0.333	0.0211*	0.0423*
E06127			1/2	0.0318	0.0635
E09015	0.375	9.53	1/16	0.0040*	0.0079*
E09025			1/10	0.0064	0.0127
E09050			1/5	0.0127	0.0254
E09102			2/5	0.0254*	0.0508*

The number with * is abbreviated.

Rated Current Code

XXX=X.XX(A)

Special Custom Type Code

Code	Custom Type
0	No end machining
S	Lead Screw End Machining
B	Add Brake
E	Add Encoder
XX	Other Special Custom Type

Nut Type Code

Code	Nut Type	Mating Lead Screw
AR1	Round Standard Nut	E06008 E06016 T06024 E06032 E06063 E06085 E06127
BR1	Round Anti-Backlash Nut	
AT1	Triangular Standard Nut	
BT1	Triangular Anti-Backlash Nut	
AR2	Round Standard Nut	E09015 E09025 E09050 E09102 M1001 M1002 M1004 T10105
BR2	Round Anti-Backlash Nut	
AT2	Triangular Standard Nut	
BT2	Triangular Anti-Backlash Nut	
AR3	Round Standard Nut	T0801 T08012 T0803 T0804 T0805 T0808 T0812 T0820
BR3	Round Anti-Backlash Nut	
AT3	Triangular Standard Nut	
BT3	Triangular Anti-Backlash Nut	
CN	Custom Made Nut	

The length of the screw Lx

###	Provided in 1 mm increments

Note:Choosing the standard order models can get the sample quickly, please see P12 for standard models.

LE17 Series

Motor Technical Parameters

Motor Type Code	Motor Body Length (mm)	Step Angle (°)	Electrical Connection	Rated Current (Amps)
LE174A	34	0.9	Plug In Connector	0.7
LE177S	20	1.8	Leads	1
LE174S	34	1.8	Plug In Connector	0.65
				1
				1.5
LE172S	40		Plug In Connector	1
				1.5
				2
LE176S	48		Plug In Connector	1
				1.5
				2

Note: Driver selection recommended P87-P94

Mating Connector With Leads

4 Lead Part Number 4634 1402 00723

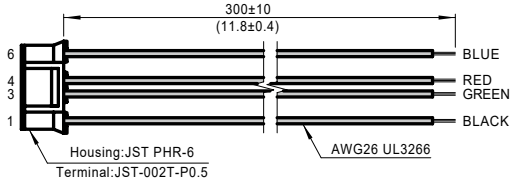

Nut Type

UNIT:mm

Round Standard Nut AR1

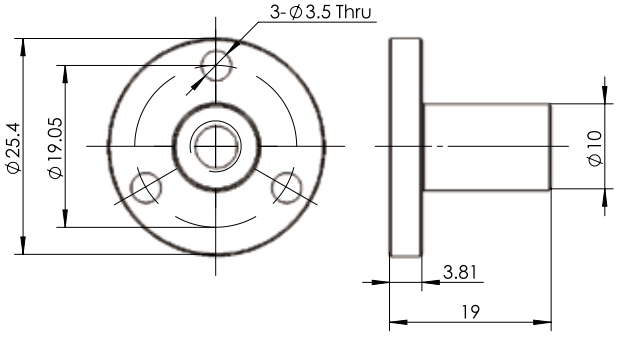

Triangular Standard Nut AT1

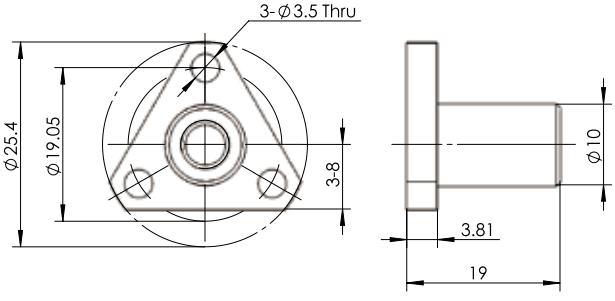

LE17 Series

Round Anti-Backlash Nut BR1

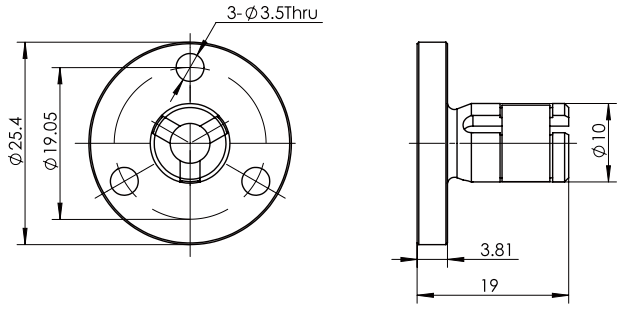

Triangular Anti-Backlash Nut BT1

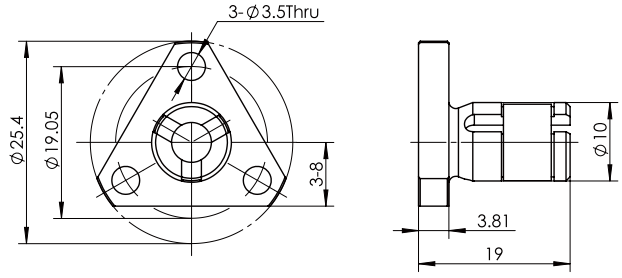

Round Standard Nut AR2

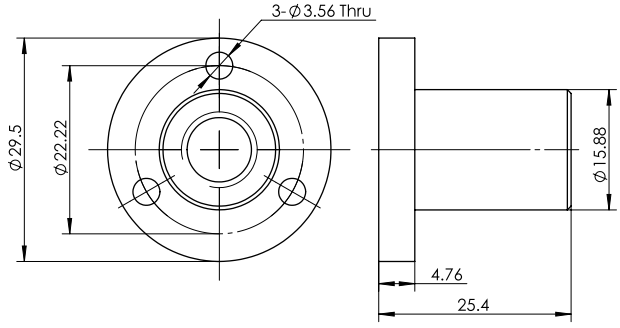

Triangular Standard Nut AT2

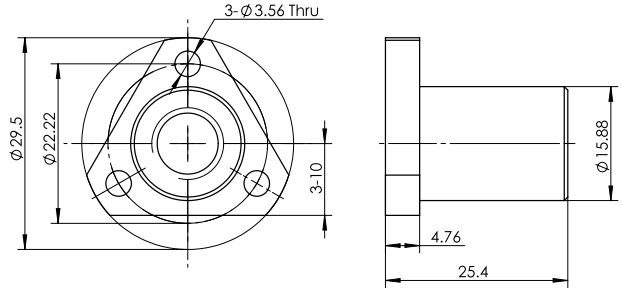

Round Anti-Backlash Nut BR2

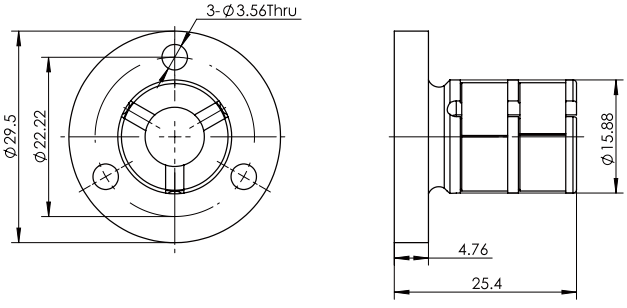

Triangular Anti-Backlash Nut BT2

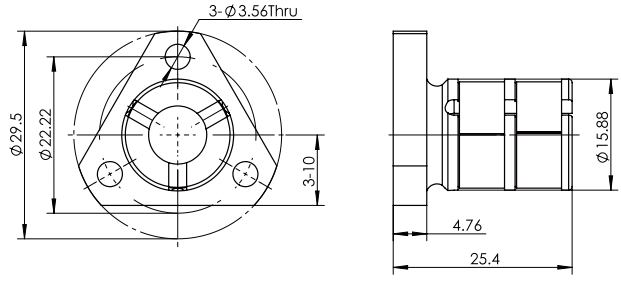

Round Standard Nut AR3

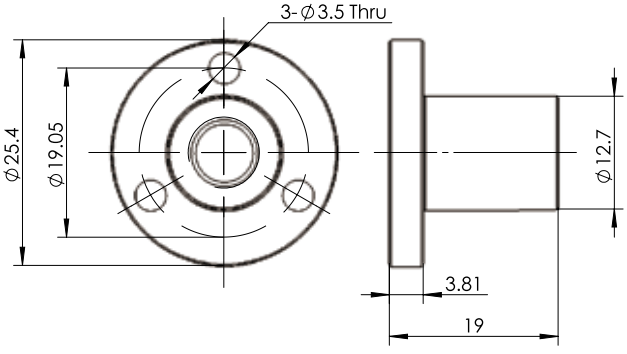

Triangular Standard Nut AT3

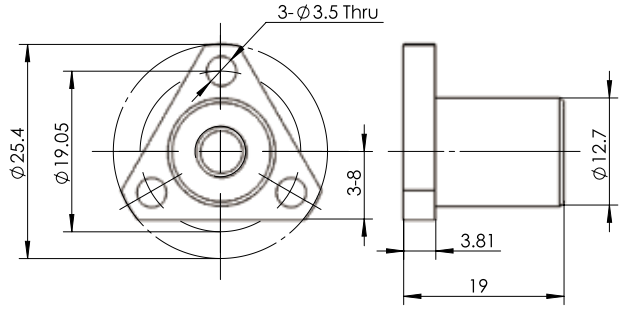

LE17 Series

Round Anti-Backlash Nut BR3

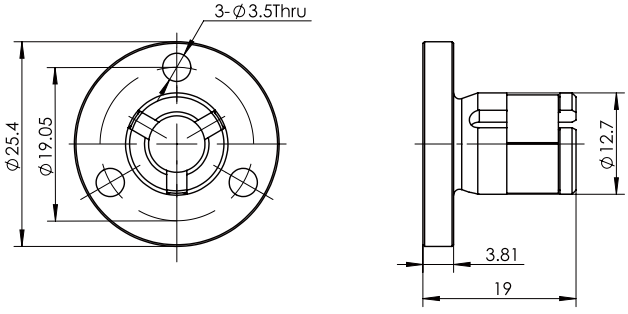

Triangular Anti-Backlash Nut BT3

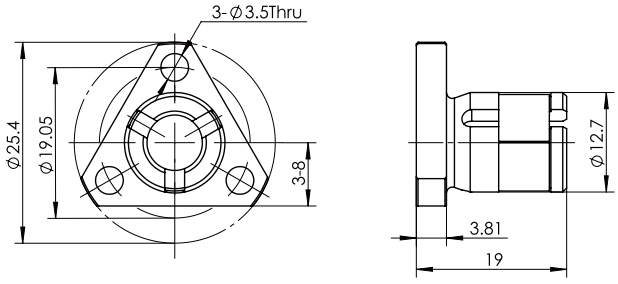

■ Dimensional Information

UNIT:mm

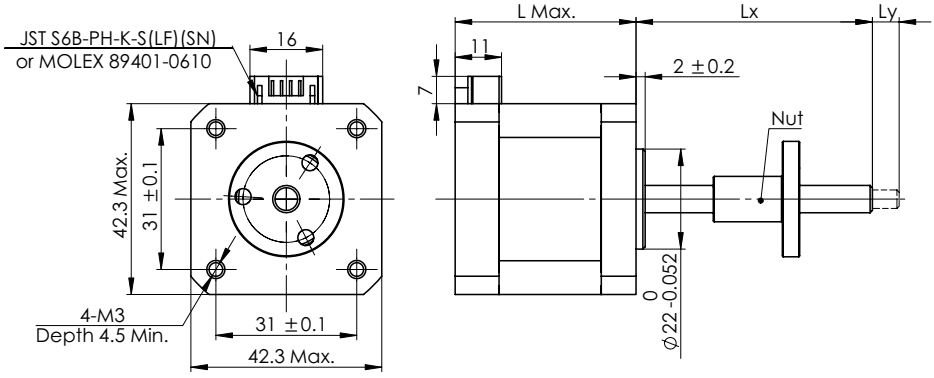

Motor Type	Dimension"L"
LE174A	34
LE174S	34
LE172S	40
LE176S	48

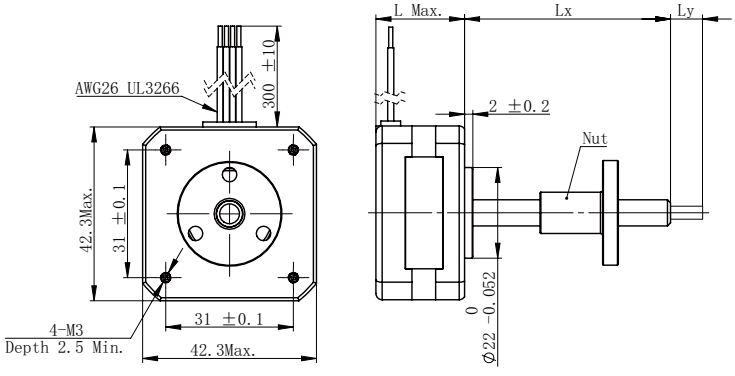

Motor Type	Dimension"L"
LE177S	20

LE17 Series

■ Speed - Force Reference Curve

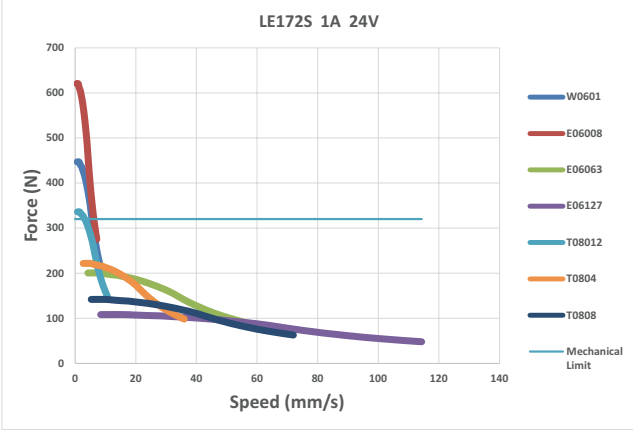

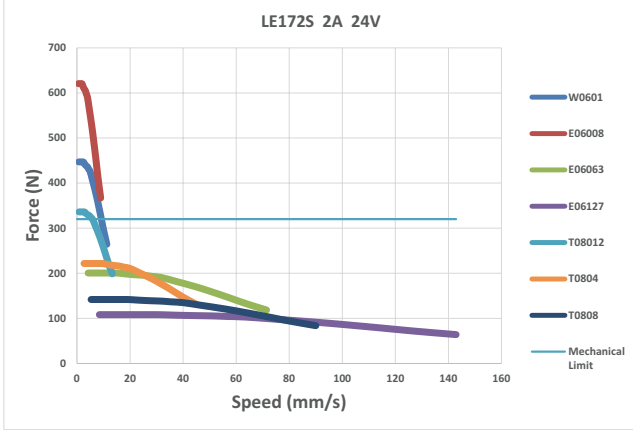

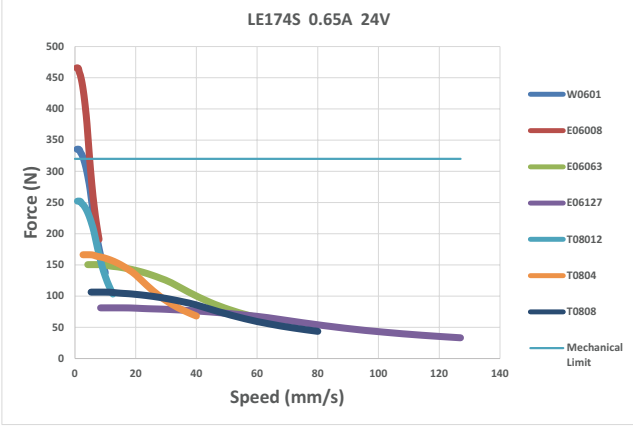

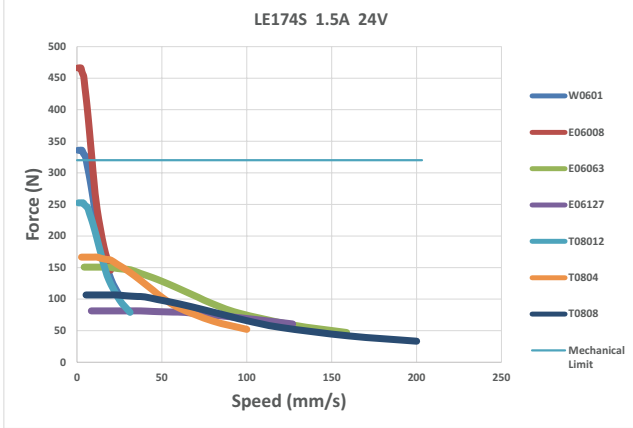

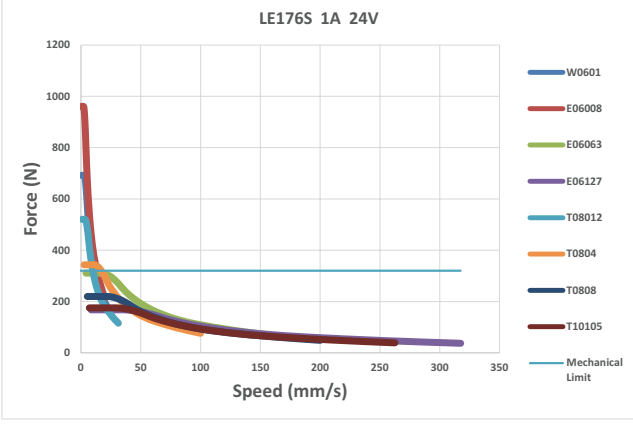

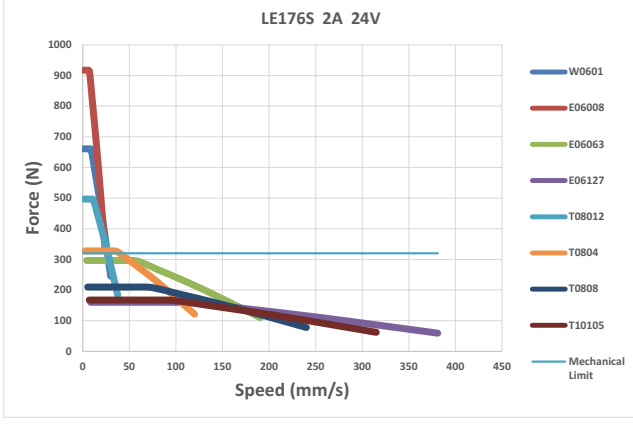

Note:
1.Mechanical Limit Definition：
Since the motor output may exceed the force which the bearing can bear, so we take the motor bearing limit as the mechanical limit. However, linear motor fatigue and resultant life are determined by each customer's unique application. Load, speed, frequency, temperature, stability of guidance mechanism, etc., should all be considered before choosing a linear motor.
2.The curves are reference values obtained by calculation. The actual output should consider the customer's unique application, including speed, acceleration and deceleration, frequency, stability of guidance mechanism, etc.

LE23 Series

Phases	2
Step Accuracy	±5%
Approvals	RoHS
Operating Temp.	0°C~+50°C
Insulation Class	B(130°C)

■ Ordering Information

LE 23 8S – M1001 – 100 – AR2 – 0 – XXX

Lead Screw Motor Type Code

Code	Structure Type
LE	External Nut Type

Frame Size Code

Code	Frame Size
23	57mm

Motor Body Length Code

Code	Motor Body Length Max(mm)	Step Angle (°)
4S	45	1.8
8S	57	
AS	79	
ASP (Power Plus)	79	

Lead Screw Type Code

Code	Nominal Diameter (mm)	Lead (mm)	Travel(mm) Travel Per1.8°
M1001	10	1	0.005
M1002		2	0.01
M1004		4	0.02
T10105		10.5	0.0525*
T1202	12	2	0.01
T1206		6	0.03
T1404	14	4	0.02

Code	Nominal Diameter inch	Nominal Diameter mm	Lead inch	Travel(mm) Travel Per1.8°
E09015	0.375	9.53	1/16	0.0079*
E09025			1/10	0.0127
E09050			1/5	0.0254
E09102			2/5	0.0508*
E12254	0.472	11.99	1	0.1270

The number with * is abbreviated.

Rated Current Code

XXX=X.XX(A)

Special Custom Type Code

Code	Custom Type
0	No end machining
S	Lead Screw End Machining
E	Add Encoder
B	Add Brake
XX	Other Special Custom Type

Nut Type Code

Code	Nut Type	Mating Lead Screw
AR2	Round Standard Nut	E09015 M1001 E09025 M1002 E09050 M1004 E09102 T10105
BR2	Round Anti-Backlash Nut	
AT2	Triangular Standard Nut	
BT2	Triangular Anti-Backlash Nut	
AR6	Round Standard Nut	T1202 T1206 T1404 E12254
BR4	Round Anti-Backlash Nut	
AT6	Triangular Standard Nut	
BT4	Triangular Anti-Backlash Nut	
CN	Custom Made Nut	

The length of the screw Lx

###	Provided in 1 mm increments

Note:Choosing the standard order models can get the sample quickly, please see P12 for standard models.

LE23 Series

■ Motor Technical Parameters

Motor Type Code	Motor Body Length (mm)	Step Angle (°)	Electrical Connection	Rated Current (Amps)
LE234S	45	1.8	Plug In Connector	1.5
				2.1
LE238S	57		Plug In Connector	1.5
				2.2
LE23AS	79		Plug In Connector	1.5
				3
LE23ASP (Power Plus)	79		Plug In Connector	3

Note: Driver selection recommended P87-P94

■ Mating Connector With Leads

4 Lead Part Number 4634 1402 01891

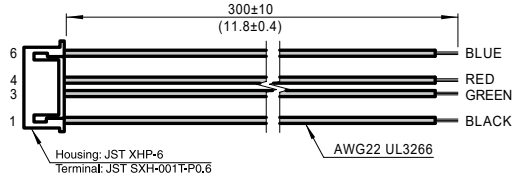

■ Nut Type

UNIT:mm

Round Standard Nut AR2

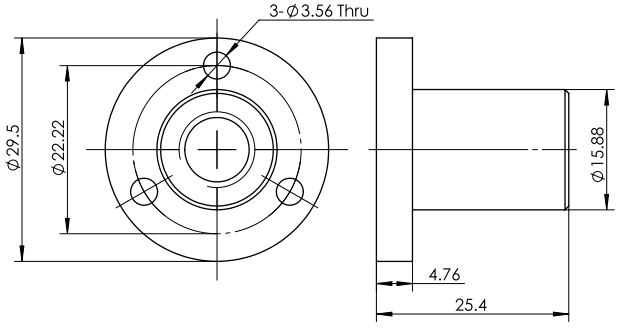

Triangular Standard Nut AT2

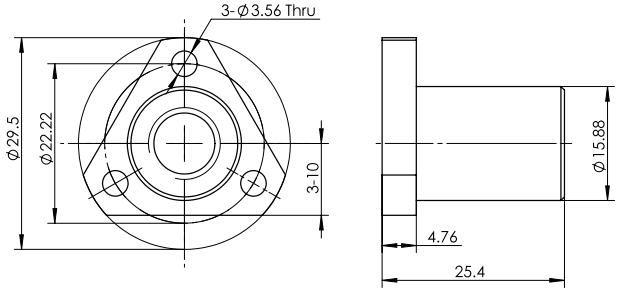

LE23 Series

Round Anti-Backlash Nut BR2

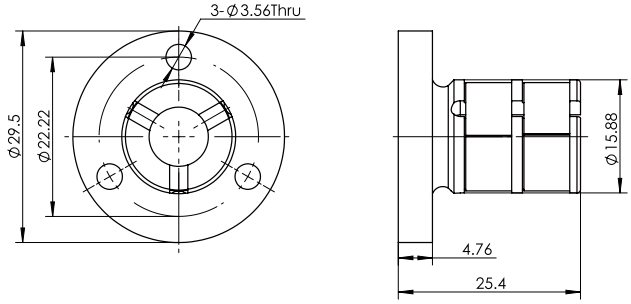

Triangular Anti-Backlash Nut BT2

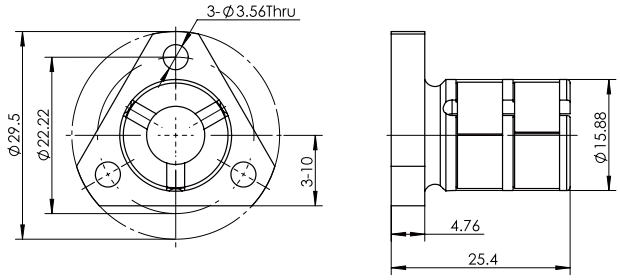

Round Standard Nut AR6

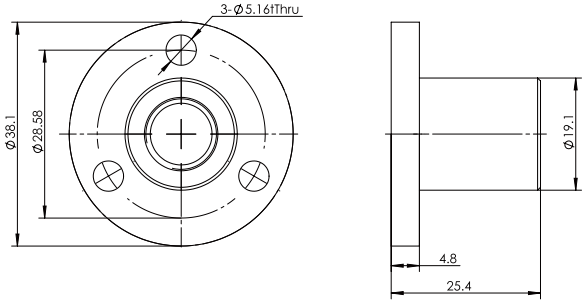

Triangular Standard Nut AT6

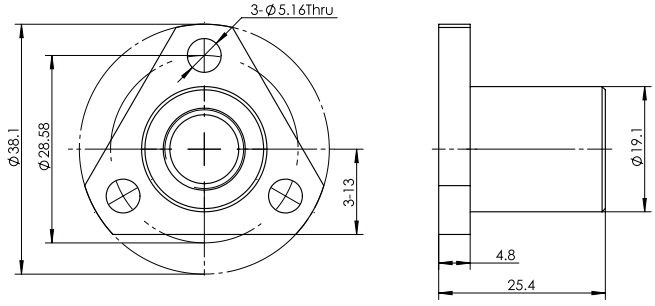

Round Anti-Backlash Nut BR4

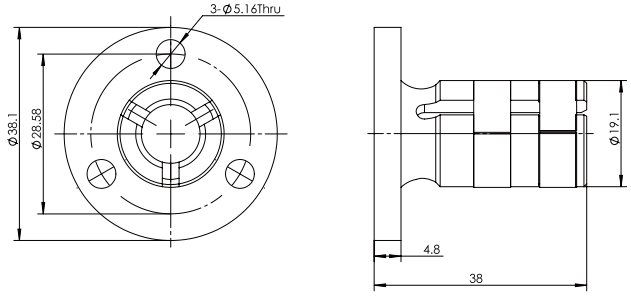

Triangular Anti-Backlash Nut BT4

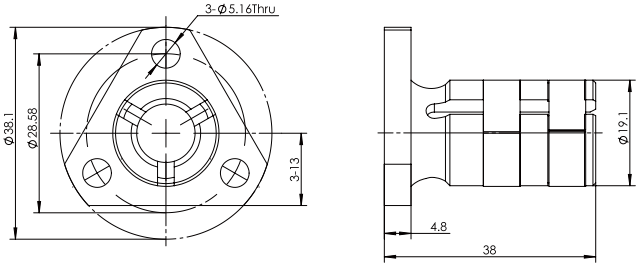

LE23 Series

■ Dimensional Information

UNIT:mm

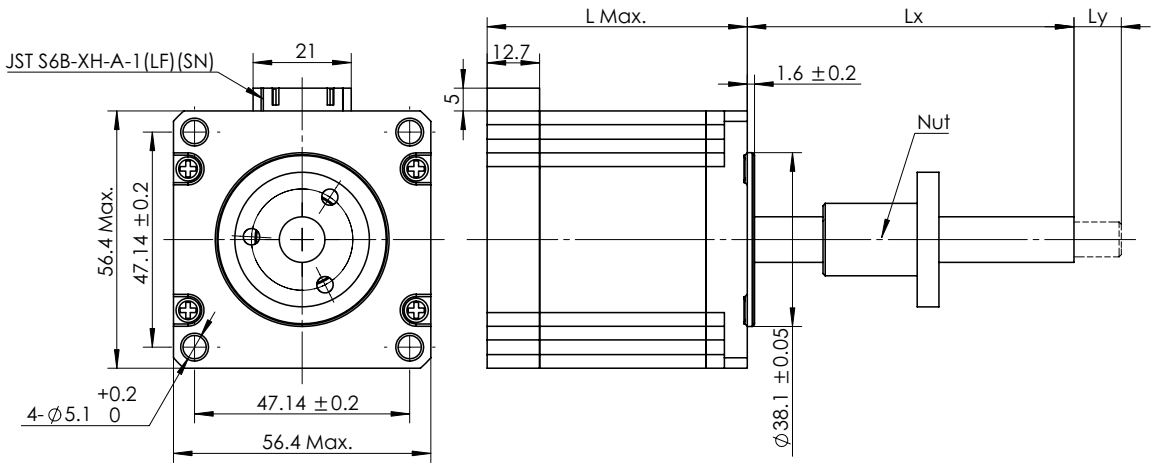

Motor Type	Dimension"L"	Note
LE234	45	Standard
LE238S	57	Standard
LE23AS	79	Standard
LE23ASP	79	Power Plus

■ Speed - Force Reference Curve

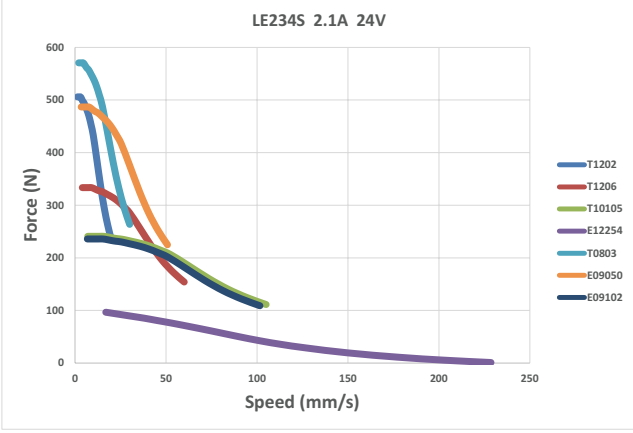

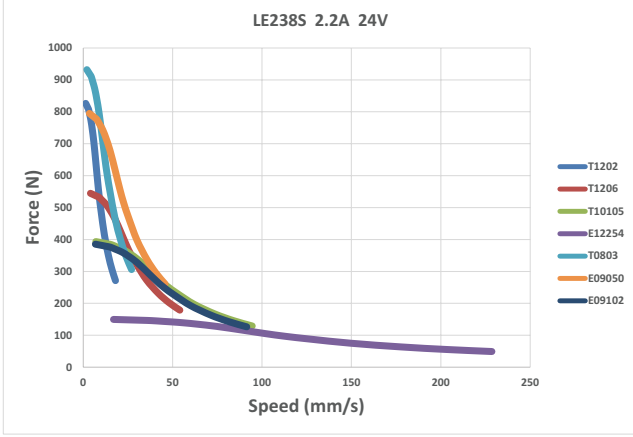

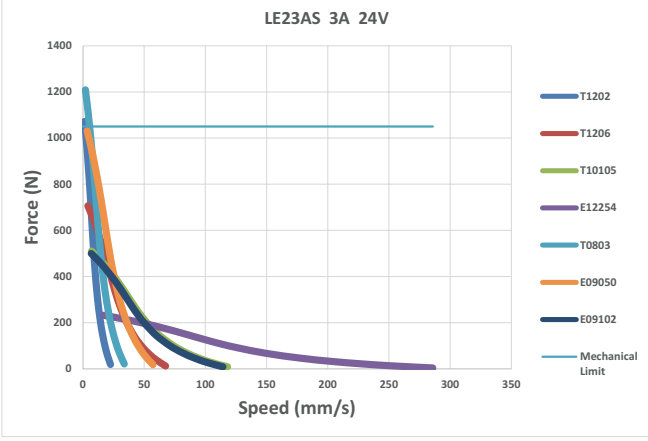

Note:

1.Mechanical Limit Definition:
Since the motor output may exceed the force which the bearing can bear, so we take the motor bearing limit as the mechanical limit. However, linear motor fatigue and resultant life are determined by each customer's unique application. Load, speed, frequency, temperature, stability of guidance mechanism, etc., should all be considered before choosing a linear motor.

2.The curves are reference values obtained by calculation. The actual output should consider the customer's unique application, including speed, acceleration and deceleration, frequency, stability of guidance mechanism, etc.

Encoder Options-Be suitable for applications that requiring feedback

Parameter

Mating Motor	Supply Voltage (VDC)			CPR	PPR	Output	
	Min.	Typ.	Max.				
LE08/11	4.5	5	5.5	400	1600	Single-ended Electrical	Differential Electrical
LE14/17/23				1000	4000		

LE11 with encoder

LE17 with encoder

Dimensional Information

Unit: mm

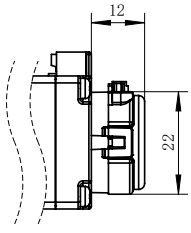

The encoder mating LE08/11

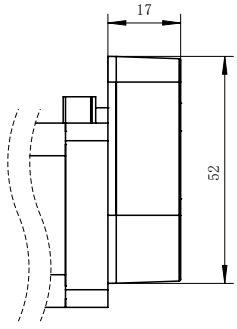

The encoder mating LE14/17/23

Mating Connector With Leads

Single-ended Electrical

Pin	Function	Color
1	+5VDC Power	Black
2	A Channel	Green
3	Ground	Red
4	B Channel	Blue

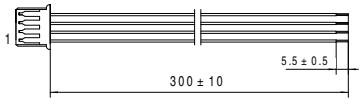

For the encoder mating LE08/11

Part Number: 4634140206404

Pin	Function	Color
1	Ground	Black
2	Index	Green
3	A Channel	Red
4	+5VDC Power	Blue
5	B Channel	Yellow

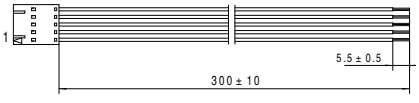

For the encoder mating LE14/17/23

Part Number: 4634140206402

Differential Electrical

Pin	Function	Color
1	Ground	Black
2	A+Channel	Green
3	A- Channel	Red
4	Power	Blue
5	B+Channel	Yellow
6	B- Channel	White

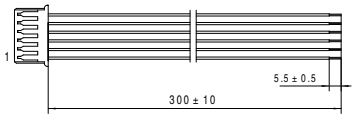

For the encoder mating LE08/11

Part Number: 4634140206403

Pin	Function	Color
1	-	-
2	Ground	Black
3	I- Channel	Green
4	I+Channel	Red
5	A- Channel	Blue
6	A+Channel	Yellow
7	Power	White
8	-	-
9	B- Channel	Orange
10	B+Channel	Brown

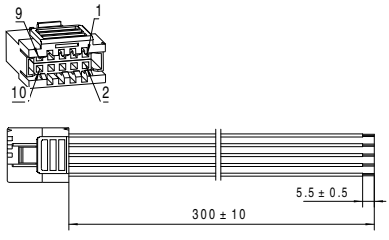

For the encoder mating LE14/17/23

Part Number: 4634140206405

Brake Options

■ Parameter

Mating Motor	Supply Voltage (VDC)	Braking Torque (N·M)	Power (W)	Reaction Time (ms)	Insulation Grade
LE11	24	0.3	4.8	15	B
LE14	24	0.3	4.8	15	B
LE17	24	1.2	4.5	50	B
LE23	24	2.5	4.5	50	B

Note:
1. All the brakes with 280mm leads.
2. 12 VDC brake options are available, please consult our technical department for further information.

LE11 with brake

LE17 with brake

LE23 with brake

■ Dimensional Information

Unit: mm

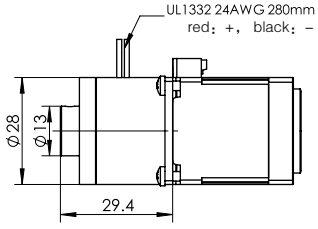

The brake mating LE11

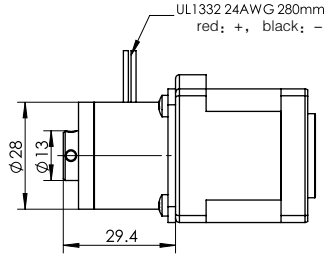

The brake mating LE14

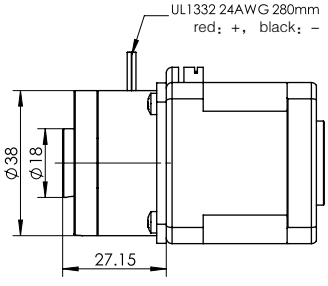

The brake mating LE17

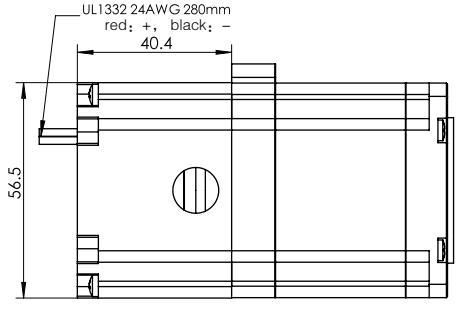

The brake mating LE23

Optional Construction & Modifications

MOONS' has provided multiple custom design to fit the application needs of designers.
Typical product customization includes:

- Lead screws: screws length, screw end machining and so on.
- Nut: basic style, materials, lengths, mounting and so on.

Note: Choosing a standard configuration can significantly reduce delivery times.

■ Lead screw End Machining

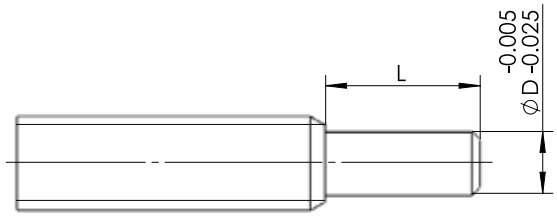

Lead Screw Nominal Diameter (mm)	Dimension	
	D(mm)	L(mm)
3~5	2.5	2.5
5.5~6.5	4	5
8~10	6	6
11~12	8	8
14	10	10

LN/LNSM : Non-captive Type

LN/LNSM series (Non-captive Type) is a type of linear step motor which makes a nut integrated with the motor, and the lead screw passes through the center of the motor. As the motor rotates it moves linearly along the lead screw. The lead-screw can be completely unscrewed from the motor, and can be any length. The motor can be fixed so that the screw moves in out of the motor, or the leadscrew can be fixed so that the motor moves along the lead screw. In addition, the unique LNSM series can be compatible with anti-backlash nut and more screw options.

- 5 frame sizes: NEMA08/11/14/17/23
- Each frame size has multiple motor length options
- Standard or anti-backlash nut option
- Standardized product models for quick response

The series lead screw motors provide high torque, high precision, and high efficiency to fit the application needs of designers. The combination of lead screw motor styles, sizes, lead-screws and nuts, gives the freedom to use motors of different form factors to exactly fit in the application. And, it provides the best performance with any drive and power supply.

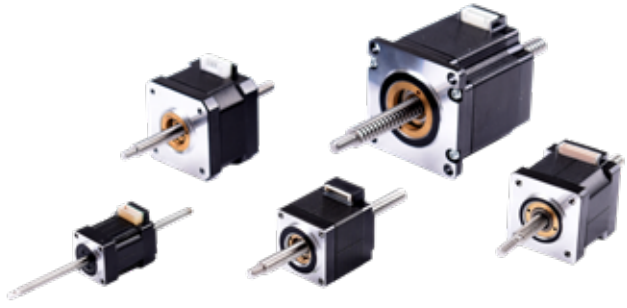

LN Series

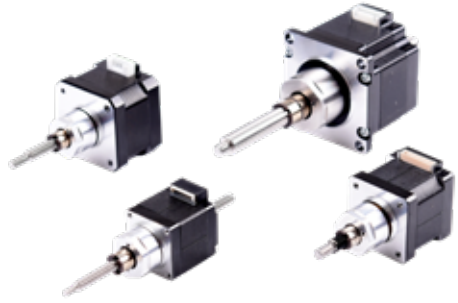

LNSM Series

■Numbering System

LN 174S – E06008 – 100 – S – XXX

①	②	③	④	⑤	⑥
Series	Motor type	Lead screw type	Screw length (mm)	Customized Code S=Screw End Machining	Rated Current XXX=X.XX(A)

LNSM 174S – E06008 – 100 – BR – S – XXX

①	②	③	④	⑤	⑥	⑦
Series	Motor type	Lead screw type	Screw length (mm)	Nut type BR=Anti-backlash Nut	Customized Code S=Screw End Machining	Rated Current XXX=X.XX(A)

LN/LNSM Series Configuration Table (Metric Screw)

Nominal Diameter (mm)	Lead (mm)	Lead Screw Code	Motor Options													
			LN081S	LN143S	LNSM 143S	LN174S	LNSM 174S	LN172S	LNSM 172S	LN176S	LNSM 176S	LN234S	LNSM 234S	LN238S	LNSM 238S	LN23AS
3.5	1	M3501	◎													
6	1	W0601		◎		◎		◎		◎						
	2	M0602		◎		◎		◎		◎						
6.5	3	T6503		◎		◎		◎		◎						
8	1	T0801										◎		◎		◎
	1.25	T08012										◎		◎		◎
	3	T0803										◎		◎		◎
	4	T0804										◎		◎		◎
	5	T0805										◎		◎		◎
	8	T0808										◎		◎		◎
	12	T0812										◎		◎		◎
	20	T0820										◎		◎		◎
10	1	M1001											◎		◎	
	2	M1002											◎		◎	
	4	M1004											◎		◎	
	10.5	T10105											◎		◎	

Note: 1.Marked with " ◎ " is available,for more configurations please contact with MOONS'.
2.The table shown is standard leadscrew options,for PTFE Coating screw please contact with MOONS'.

LN/LNSM Series Configuration Table (Inch Screw)

Nominal Diameter		Lead	Lead Screw Code	Motor Options																
inch	mm	inch		LN081S	LN111S	LNSM 111S	LNSM 113S	LN143S	LNSM 143S	LN174S	LNSM 174S	LN172S	LNSM 172S	LN176S	LNSM 176S	LN234S	LNSM 234S	LN238S	LNSM 238S	LN23AS
0.138	3.51	0.024	E03006	◎																
		0.048	E03012	◎																
		0.096	E03024	◎																
0.188	4.78	1/40	E04006			◎														
		1/20	E04012			◎														
		1/10	E04025			◎														
0.218	5.54	0.024	E05006					◎		◎		◎		◎						
		0.048	E05012					◎		◎		◎		◎						
		0.192	E05048					◎		◎		◎		◎						
0.25	6.35	1/32	E06008					◎		◎		◎		◎						
		1/16	E06016					◎		◎		◎		◎						
		0.096	T06024					◎		◎		◎		◎						
		1/8	E06032					◎		◎		◎		◎						
		1/4	E06063					◎		◎		◎		◎						
		0.333	E06085					◎		◎		◎		◎						
		1/2	E06127					◎		◎		◎		◎						
0.375	9.53	1/16	E09015													◎		◎		◎
		1/10	E09025													◎		◎		◎
		1/5	E09050													◎		◎		◎
		2/5	E09102													◎		◎		◎

Note: 1.Marked with " ◎ " is available,for more configurations please contact with MOONS'.
2.The table shown is standard leadscrew options,for PTFE Coating screw please contact with MOONS'.
3. 1 inch=25.4 mm

LN Series Standard Models for stock

Size (mm)	Motor Series		Lead Screw Options		Screw Length Options		End Machining Code		Rated Current Options	Page
20X20	LN081S	-	E03006 E03024	-	70, 80, 90, 100, 110, 125	-	S	-	050	P40
28X28	LN111S	-	E04006 E04025	-	70, 80, 90, 100, 110, 125, 150, 180	-	S	-	050,067,100	P42
35X35	LN143S	-	W0601 E06008 E06063 E06127	-	70, 80, 100, 125, 150	-	S	-	050,100,150	P45
42X42	LN174S	-	W0601 E06008 E06063 E06127	-	80, 90, 100, 110, 125, 155, 170, 180, 210, 250, 300	-	S	-	065,100,150	P48
	LN172S	-	W0601 E06008 E06063 E06127	-	80, 90, 100, 110, 125, 155, 170, 180, 210, 250, 300	-	S	-	100,150,200	
	LN176S	-	W0601 E06008 E06063 E06127	-	80, 90, 100, 110, 125, 155, 170, 180, 210, 250, 300	-	S	-	100,200	
57X57	LN234S	-	T0803 E09050 E09102	-	100, 155, 180, 210, 250, 300, 350,400	-	S	-	150,210	P52
	LN238S	-	T0803 E09050 E09102	-	100, 155, 180, 210, 250, 300, 350,400	-	S	-	220	
	LN23AS	-	T0803 E09050 E09102	-	100, 155,180, 210, 250, 300, 350,400	-	S	-	300	

Order sample

① Select configuration codes

Motor Series		Lead Screw Options		Screw Length Options		End Machining Code		Rated Current Options
LN111S	-	E04006	-	70, 80, 90, 100, 110, 125, 150, 180	-	S	-	050, 067,100

② Determine the order Models

LN111S - E04006 - 100 - S - 067

In addition to the standard number, we also provide a wealth of customized configuration options, for more information please contact the factory.

LN08 Series

Phases	2
Step Accuracy	±5%
Approvals	RoHS
Operating Temp.	0°C~+50°C
Insulation Class	B(130°C)

■ Ordering Information

LN 08 1S – E03006 – 100 – S – XXX

Lead Screw Motor Type Code

Code	Structure Type
LN	Non-captive Shaft

Frame Size Code

Code	Frame Size
08	20mm

Lead Screw Type Code

Code	Motor Body Length Max(mm)	Step Angle (°)
1S	30	1.8

Lead Screw Type Code

Code	Nominal Diameter (mm)	Lead (mm)	Travel(mm) Travel Per1.8°
M3501	3.5	1	0.005

Code	Nominal Diameter inch	Nominal Diameter mm	Lead inch	Travel(mm) Travel Per1.8°
E03006	0.138	3.51	0.024	0.0030*
E03012			0.048	0.0061*
E03024			0.096	0.0122*

The number with * is abbreviated.

Rated Current Code

XXX=X.XX(A)

Special Custom Type Code

Code	Custom Type
0	No end machining
S	Lead Screw End Machining
XX	Other Special Custom Type

The length of the screw Lx

###	Provided in 1 mm increments

Note:Choosing the standard order models can get the sample quickly, please see P39 for standard models.

LN08 Series

Motor Technical Parameters

Motor Type Code	Motor Body Length (mm)	Step Angle (°)	Electrical Connection	Rated Current (Amps)
LN081S	30	1.8	Plug In Connector	0.5

Note: Driver selection recommended P87-P94

Mating Connector With Leads

4 Lead Part Number4634 1402 03659

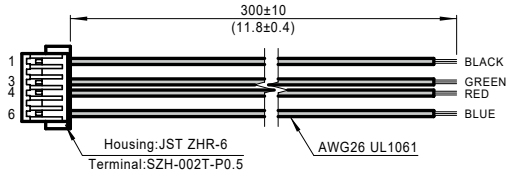

Dimensional Information

UNIT:mm

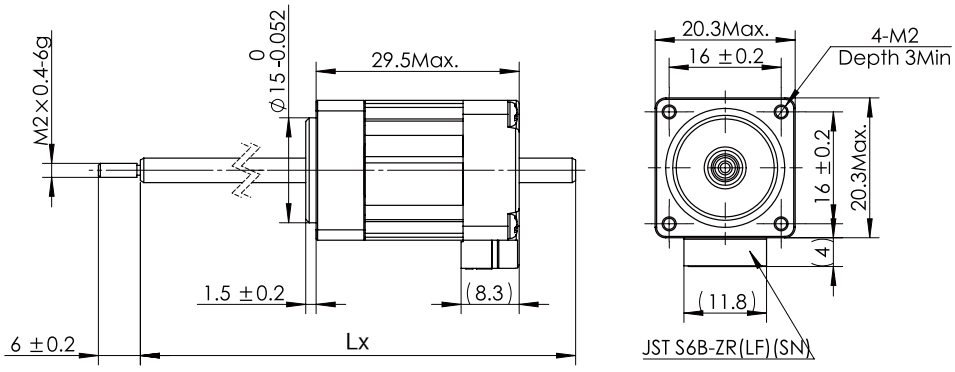

Speed - Force Reference Curve

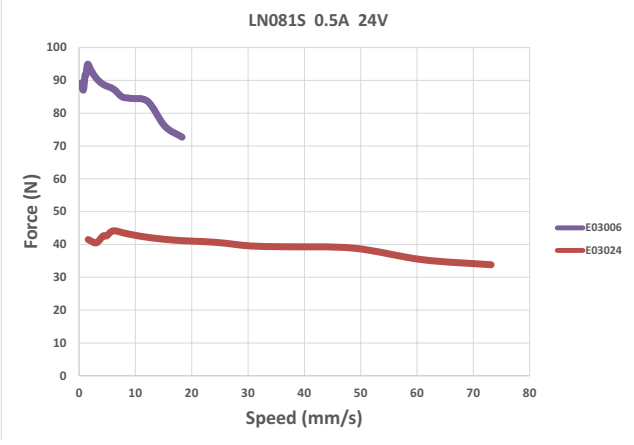

Note: The curves are reference values obtained by calculation. The actual output should consider the customer's unique application, including speed, acceleration and deceleration, frequency, stability of guidance mechanism, etc.

LN/LNSM11 Series

Phases	2
Step Accuracy	±5%
Approvals	RoHS
Operating Temp.	0°C~+50°C
Insulation Class	B(130°C)

■ Ordering Information

LN 11 1S – E04006 – 100 – AR – S – XXX

Lead Screw Motor Type Code

Code	Structure Type
LN	Non-captive Shaft
LNSM	

Frame Size Code

Code	Frame Size
11	28mm

Motor Body Length Code

Code	Motor Body Length Max(mm)	Step Angle (°)
1S	32	1.8
3S*	41	

Only LNSM series can match the "3S"code motor.

Lead Screw Type Code

Code	Nominal Diameter		Lead	Travel(mm)
	inch	mm	inch	Travel Per1.8°
E04006	0.188	4.78	1/40	0.0032*
E04012			0.050	0.0064*
E04025			1/10	0.0127*

The number with * is abbreviated.

Rated Current Code

XXX=X.XX(A)

Special Custom Type Code

Code	Custom Type
0	No end machining
S	Lead Screw End Machining
XX	Other Special Custom Type

Nut Type Code

Code	Nut Type
AR	Standard Nut
BR	Anti-backlash Nut

Only LNSM series can match the Anti-backlash nut.

The length of the screw Lx

###	Provided in 1 mm increments

Note:Choosing the standard order models can get the sample quickly, please see P39 for standard models.

LN/LNSM11 Series

Motor Technical Parameters

Motor Type Code	Motor Body Length (mm)	Step Angle (°)	Electrical Connection	Rated Current (Amps)
LN111S	32	1.8	Plug In Connector	0.67
				1
LNSM111S	32	1.8	Plug In Connector	0.5
				0.67
LNSM113S	41		Plug In Connector	0.95

Note: Driver selection recommended P87-P94

Mating Connector With Leads

4 Lead Part Number 4634 1402 04190

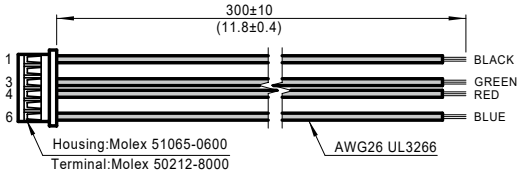

Dimensional Information

UNIT:mm

LN11 Series

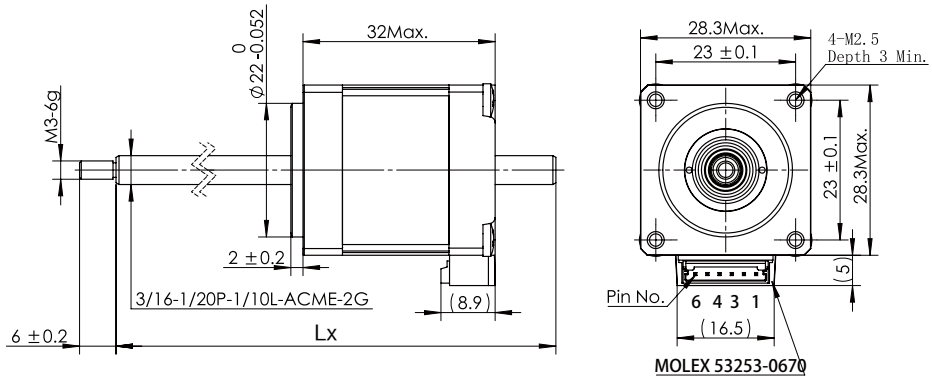

LN/LNSM11 Series

LNSM 11 Series

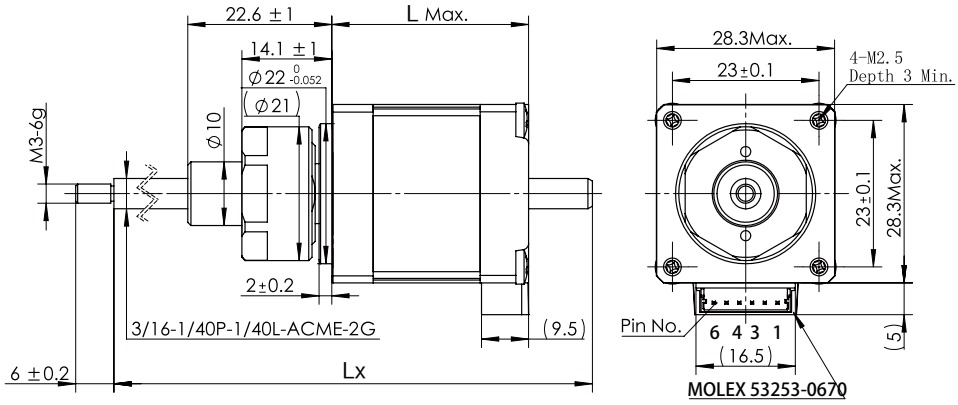

Motor Type	Dimension"L"
LNSM111S	32
LNSM113S	41

■ Speed - Force Reference Curve

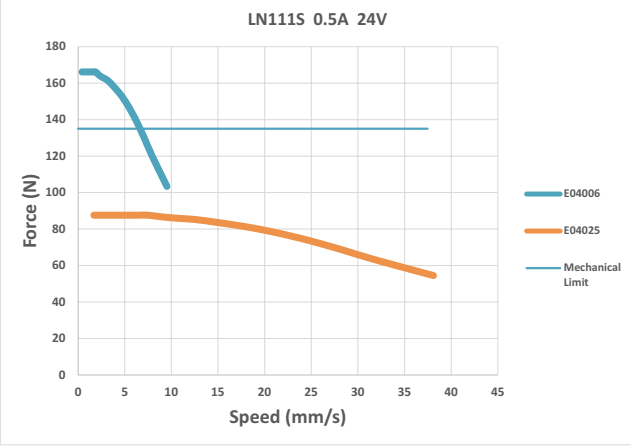

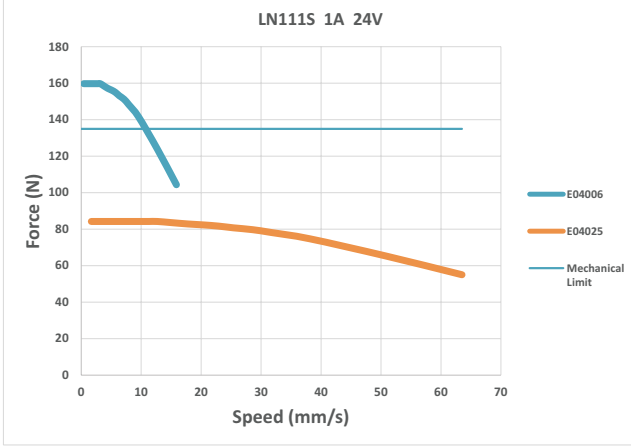

Note:
1.LNSM series speed - force curve, please refer to the above LN series curve.

2.Mechanical Limit Definition：
Since the motor output may exceed the force which the bearing can bear, so we take the motor bearing limit as the mechanical limit. However, linear motor fatigue and resultant life are determined by each customer's unique application. Load, speed, frequency, temperature, stability of guidance mechanism, etc., should all be considered before choosing a linear motor.

3.The curves are reference values obtained by calculation. The actual output should consider the customer's unique application, including speed, acceleration and deceleration, frequency, stability of guidance mechanism, etc.

LN/LNSM14 Series

Phases	2
Step Accuracy	±5%
Approvals	RoHS
Operating Temp.	0°C~+50°C
Insulation Class	B(130°C)

Ordering Information

LN 14 3S – W0601 – 100 – AR – S – XXX

Lead Screw Motor Type Code

Code	Structure Type
LN	Non-captive Shaft
LNSM	

Frame Size Code

Code	Frame Size
14	35mm

Motor Body Length Code

Code	Motor Body Length Max(mm)	Step Angle (°)
3S	35	1.8

Lead Screw Type Code

Code	Nominal Diameter (mm)	Lead (mm)	Travel(mm) Travel Per1.8°
W0601	6	1	0.005
M0602		2	0.01
T6503	6.5	3	0.015

Code	Nominal Diameter inch	Nominal Diameter mm	Lead inch	Travel(mm) Travel Per1.8°
E05006	0.218	5.54	0.024	0.0030*
E05012			0.048	0.0061*
E05048			0.192	0.0244*
E06008	0.25	6.35	1/32	0.0039*
E06016			1/16	0.0080*
T06024			0.096	0.0122*
E06032			1/8	0.0159*
E06063			1/4	0.0318*
E06085			0.333	0.0423*
E06127			1/2	0.0635

The number with * is abbreviated.

Rated Current Code

XXX=X.XX(A)

Special Custom Type Code

Code	Custom Type
0	No end machining
S	Lead Screw End Machining
XX	Other Special Custom Type

Nut Type Code

Code	Nut Type
AR	Standard Nut
BR	Anti-backlash Nut

Only LNSM series can match the Anti-backlash nut.

The length of the screw Lx

###	Provided in 1 mm increments

Note:Choosing the standard order models can get the sample quickly, please see P39 for standard models.

LN/LNSM14 Series

■ Motor Technical Parameters

Motor Type Code	Motor Body Length (mm)	Step Angle (°)	Electrical Connection	Rated Current (Amps)
LN143S	35	1.8	Plug In Connector	0.5
				1
				1.5
LNSM143S	35	1.8	Plug In Connector	1
				1.5

Note: Driver selection recommended P87-P94

■ Mating Connector With Leads

4 Lead Part Number 4634 1402 04581

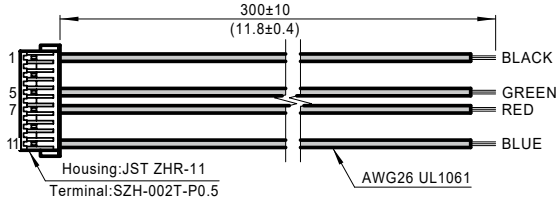

■ Dimensional Information

UNIT:mm

LN14 Series

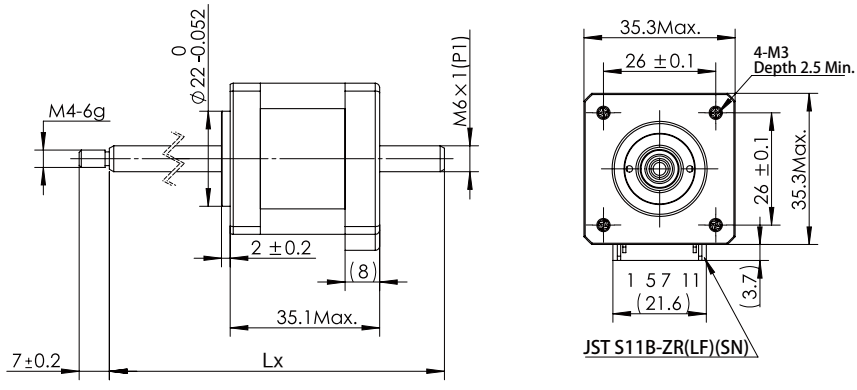

LN/LNSM14 Series

LNSM14 Series

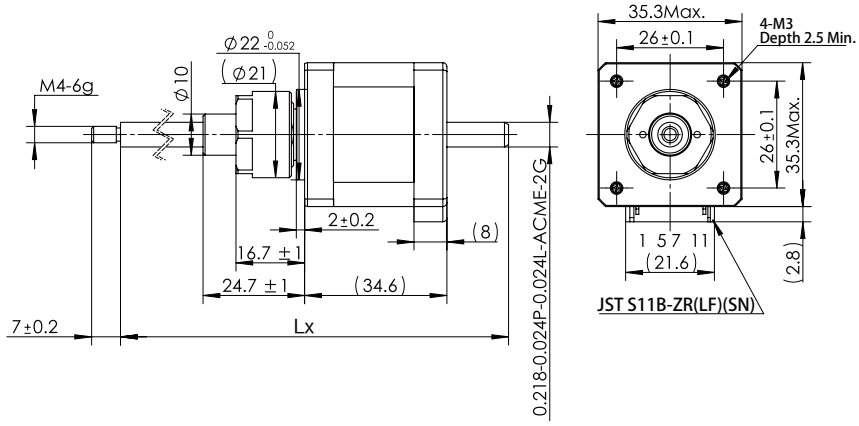

■ Speed - Force Reference Curve

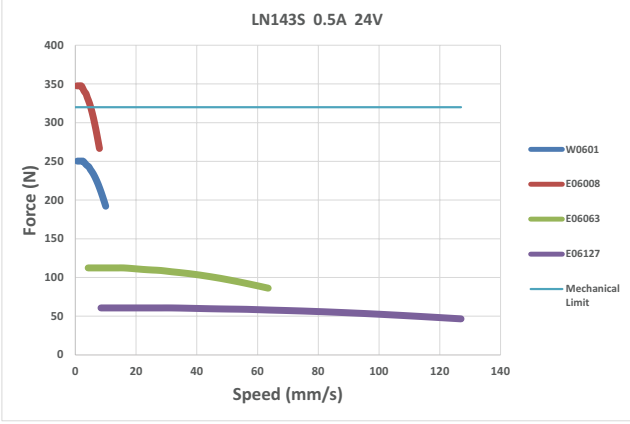

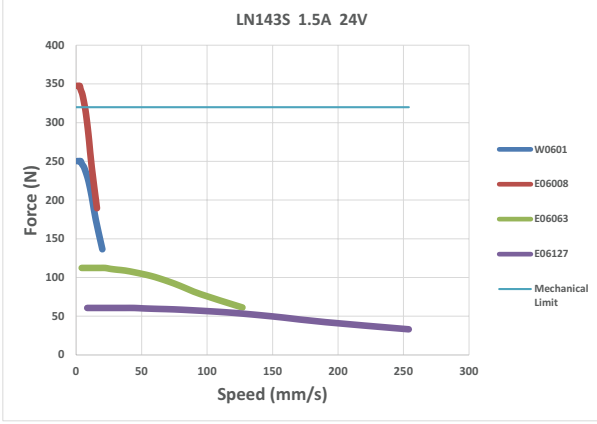

Note:
1.LNSM series speed - force curve, please refer to the above LN series curve.

2.Mechanical Limit Definition：
Since the motor output may exceed the force which the bearing can bear, so we take the motor bearing limit as the mechanical limit. However, linear motor fatigue and resultant life are determined by each customer's unique application. Load, speed, frequency, temperature, stability of guidance mechanism, etc., should all be considered before choosing a linear motor.

3.The curves are reference values obtained by calculation. The actual output should consider the customer's unique application, including speed, acceleration and deceleration, frequency, stability of guidance mechanism, etc.

LN/LNSM17 Series

Phases	2
Step Accuracy	±5%
Approvals	RoHS
Operating Temp.	0°C~+50°C
Insulation Class	B(130°C)

■ Ordering Information

LN 17 2S – M0602 – 100 – AR – S – XXX

Lead Screw Motor Type Code

Code	Structure Type
LN	Non-captive Shaft
LNSM	

Frame Size Code

Code	Frame Size
17	42mm

Motor Body Length Code

Code	Motor Body Length Max(mm)	Step Angle (°)
4S	34	1.8
2S	40	
6S	48	

Lead Screw Type Code

Code	Nominal Diameter (mm)	Lead (mm)	Travel(mm) Travel Per1.8°
W0601	6	1	0.005
M0602		2	0.01
T6503	6.5	3	0.015

Code	Nominal Diameter inch	Nominal Diameter mm	Lead inch	Travel(mm) Travel Per1.8°
E05006	0.218	5.54	0.024	0.0030*
E05012			0.048	0.0061*
E05048			0.192	0.0244*
E06008	0.25	6.35	1/32	0.0039*
E06016			1/16	0.0080*
T06024			0.096	0.0122*
E06032			1/8	0.0159*
E06063			1/4	0.0318*
E06085			0.333	0.0423*
E06127			1/2	0.0635

The number with * is abbreviated.

Rated Current Code

XXX=X.XX(A)

Special Custom Type Code

Code	Custom Type
0	No end machining
S	Lead Screw End Machining
XX	Other Special Custom Type

Nut Type Code

Code	Nut Type
AR	Standard Nut
BR	Anti-backlash Nut

Only LNSM series can match the Anti-backlash nut.

The length of the screw Lx

###	Provided in 1 mm increments

Note:Choosing the standard order models can get the sample quickly, please see P39 for standard models.

LN/LNSM17 Series

Motor Technical Parameters

Motor Type Code	Motor Body Length (mm)	Step Angle (°)	Electrical Connection	Rated Current (Amps)
LN174S	34	1.8	Plug In Connector	0.65
				1
				1.5
LNSM174S	34	1.8	Plug In Connector	0.65
				1
LN172S	40	1.8	Plug In Connector	1
				1.5
				2
LNSM172S	40	1.8	Plug In Connector	1.5
LN176S	48	1.8	Plug In Connector	1
				2
LNSM176S	48	1.8	Plug In Connector	1
				2

Note: Driver selection recommended P87-P94

Mating Connector With Leads

4 Lead Part Number 4634 1402 00723

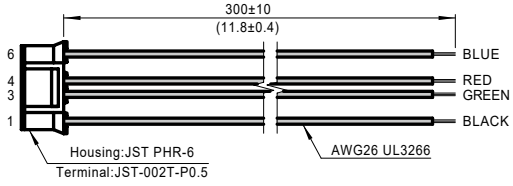

LN/LNSM17 Series

■ Dimensional Information

UNIT:mm

LN17 Series

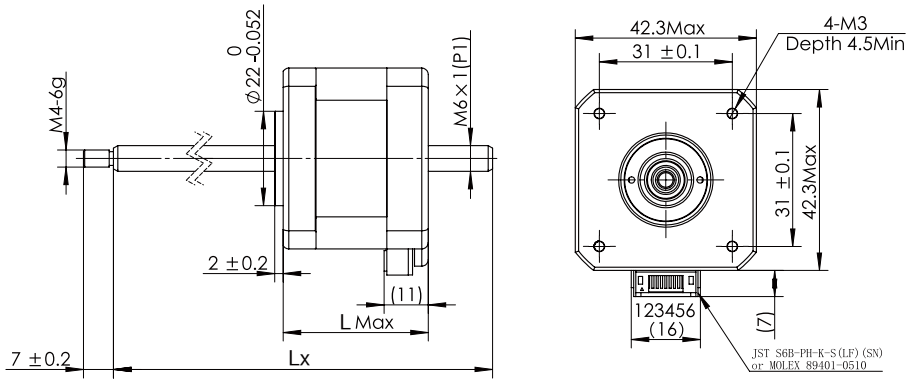

Motor Type	Dimension"L"
LN174S	34
LN172S	40
LN176S	48

LNSM17 Series

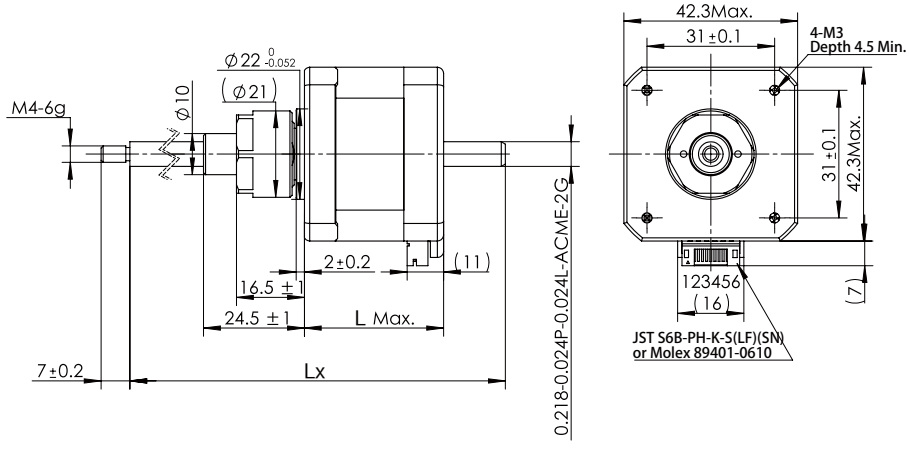

Motor Type	Dimension"L"
LNSM174S	34
LNSM172S	40
LNSM176S	48

LN/LNSM17 Series

■ Speed - Force Reference Curve

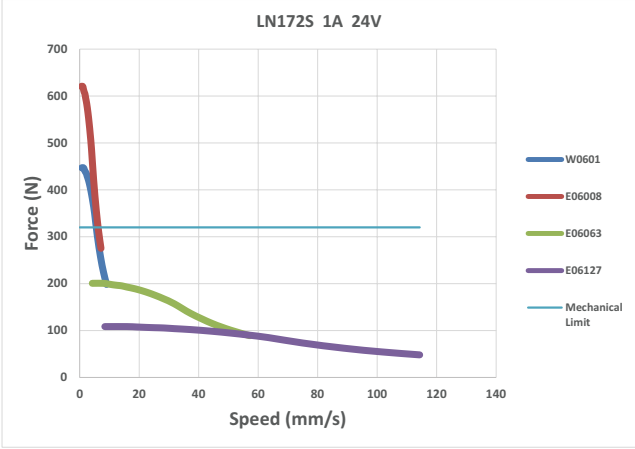

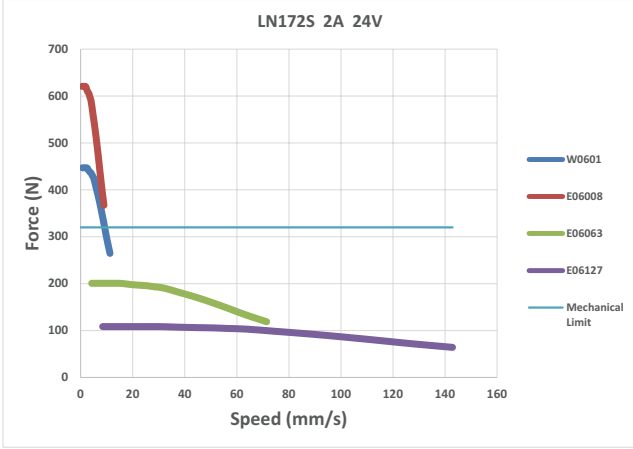

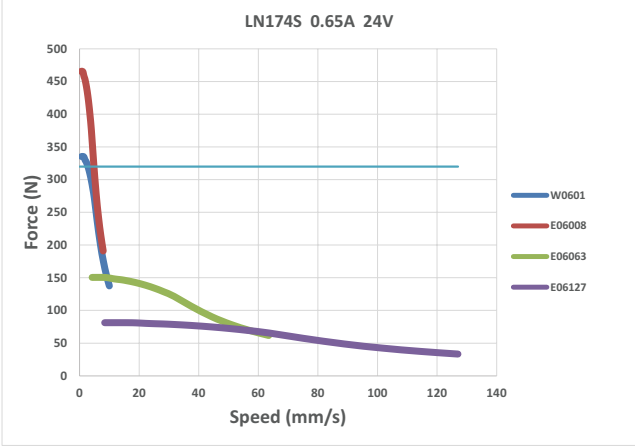

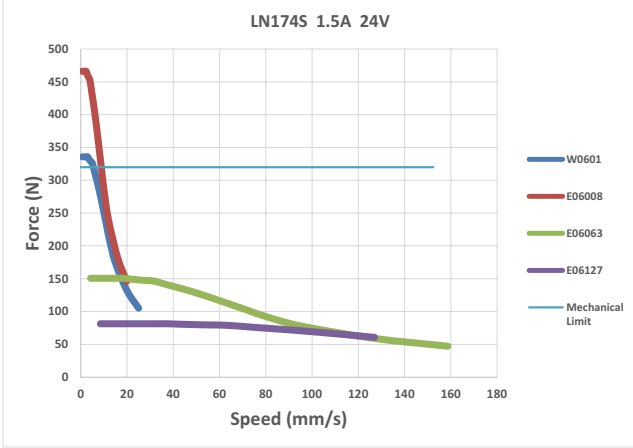

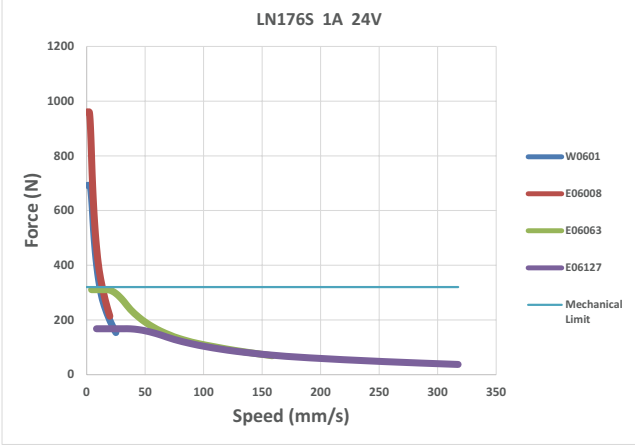

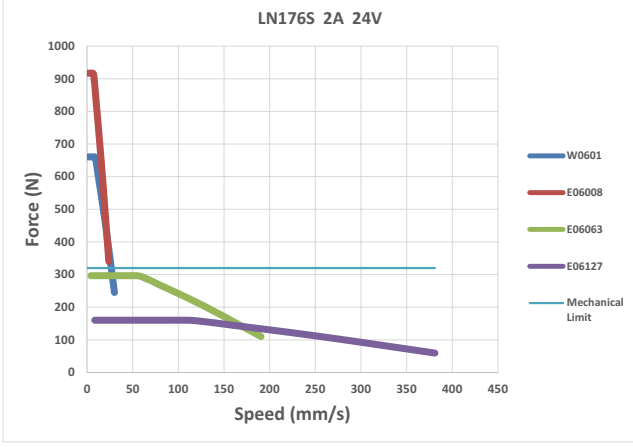

Note:
1.LNSM series speed - force curve, please refer to the above LN series curve.

2.Mechanical Limit Definition：
Since the motor output may exceed the force which the bearing can bear, so we take the motor bearing limit as the mechanical limit. However, linear motor fatigue and resultant life are determined by each customer's unique application. Load, speed, frequency, temperature, stability of guidance mechanism, etc., should all be considered before choosing a linear motor.

3.The curves are reference values obtained by calculation. The actual output should consider the customer's unique application, including speed, acceleration and deceleration, frequency, stability of guidance mechanism, etc.

LN/LNSM23 Series

Phases	2
Step Accuracy	±5%
Approvals	RoHS
Operating Temp.	0°C~+50°C
Insulation Class	B(130°C)

■ Ordering Information

LN 23 8S – M1001 – 100 – AR – S – XXX

Lead Screw Motor Type Code

Code	Structure Type
LN	Non-captive Shaft
LNSM	

Frame Size Code

Code	Frame Size
23	57mm

Motor Body Length Code

Code	Motor Body Length Max(mm)	Step Angle (°)
4S	45	1.8
8S	57	
AS*	79	

Only LN series can match the "AS"code motor.

Lead Screw Type Code

Code	Nominal Diameter (mm)	Lead (mm)	Travel(mm) Travel Per1.8°
T0801	8	1	0.005
T08012		1.25	0.0063*
T0803		3	0.015
T0804		4	0.02
T0805		5	0.025
T0808		8	0.04
T0812		12	0.06
T0820		20	0.1
M1001	10	1	0.005
M1002		2	0.01
M1004		4	0.02
T10105		10.5	0.0525*

Code	Nominal Diameter		Lead	Travel(mm)
	inch	mm	inch	Travel Per1.8°
E09015	0.375	9.53	1/16	0.0079*
E09025			1/10	0.0127
E09050			1/5	0.0254
E09102			2/5	0.0508*

1.The number with * is abbreviated.
2.Only LNSM series can match the ϕ 9.7/10 mm screw.

Rated Current Code

XXX=X.XX(A)

Special Custom Type Code

Code	Custom Type
0	No end machining
S	Lead Screw End Machining
XX	Other Special Custom Type

Nut Type Code

Code	Nut Type
AR	Standard Nut
BR	Anti-backlash Nut

Only LNSM series can match the Anti-backlash nut.

The length of the screw Lx

###	Provided in 1 mm increments

Note:Choosing the standard order models can get the sample quickly, please see P39 for standard models.

LN/LNSM23 Series

Motor Technical Parameters

Motor Type Code	Motor Body Length (mm)	Step Angle (°)	Electrical Connection	Rated Current (Amps)
LN234S	45	1.8	Plug In Connector	1.5
				2.1
LNSM234S	45	1.8	Plug In Connector	1.5
				2.1
LN238S	57	1.8	Plug In Connector	1.5
				2.2
LNSM238S	57	1.8	Plug In Connector	1.5
				2.2
LN23AS	79	1.8	Plug In Connector	1.5
				3

Note: Driver selection recommended P87-P94

Mating Connector With Leads

4 Lead Part Number 4634 1402 01891

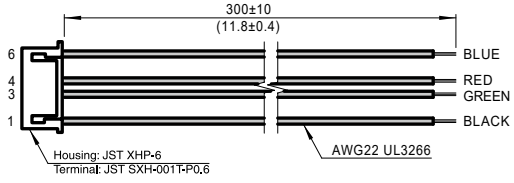

LN/LNSM23 Series

■ Dimensional Information

UNIT:mm

LN23 Series

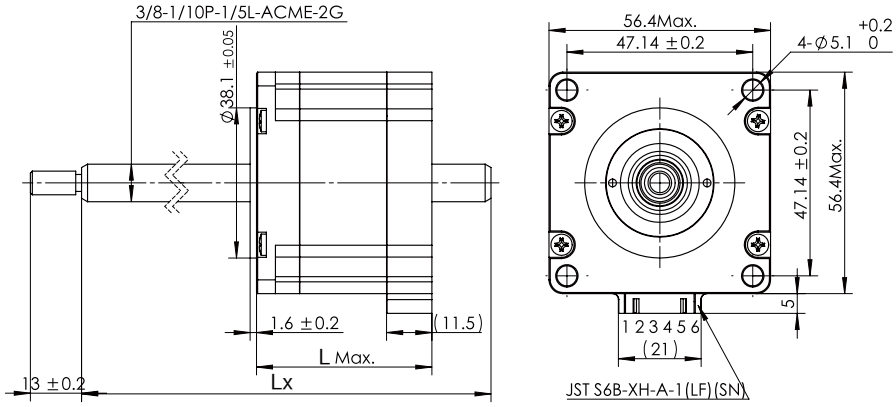

Motor Type	Dimension"L"
LN234S	45
LN238S	57
LN23AS	79

LNSM23 Series

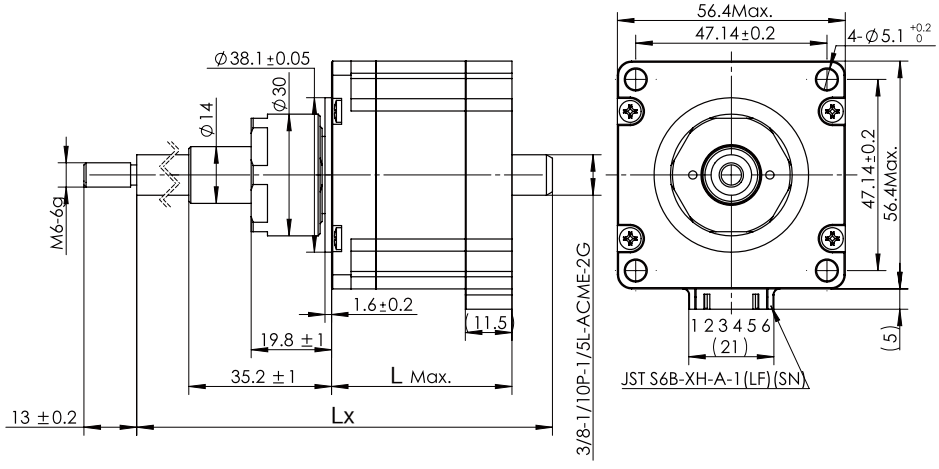

Motor Type	Dimension"L"
LNSM234S	45
LNSM238S	57

LN/LNSM23 Series

■ Speed - Force Reference Curve

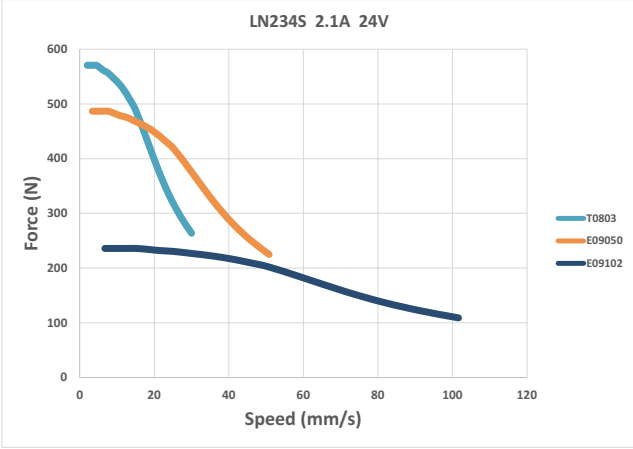

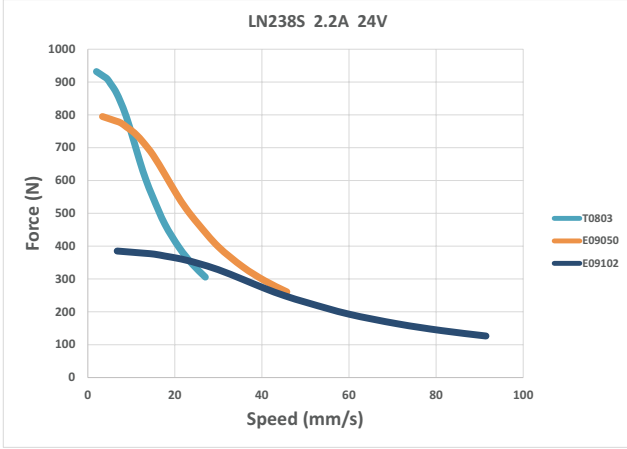

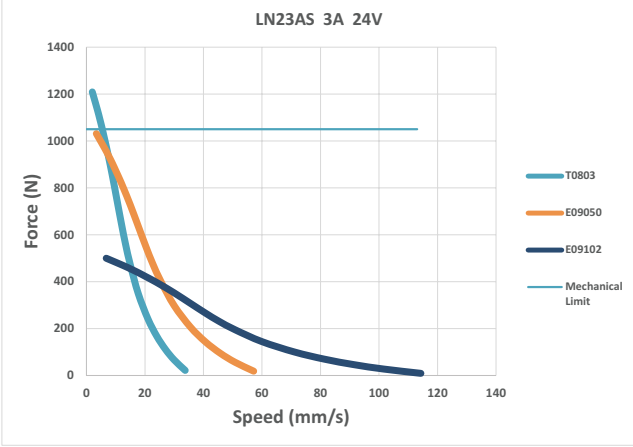

Note:
1.LNSM series speed - force curve, please refer to the above LN series curve.

2.Mechanical Limit Definition：
Since the motor output may exceed the force which the bearing can bear, so we take the motor bearing limit as the mechanical limit. However, linear motor fatigue and resultant life are determined by each customer's unique application. Load, speed, frequency, temperature, stability of guidance mechanism, etc., should all be considered before choosing a linear motor.

3.The curves are reference values obtained by calculation. The actual output should consider the customer's unique application, including speed, acceleration and deceleration, frequency, stability of guidance mechanism, etc.

LC : Captive Type

LC series (Captive Type) is a type of linear step motor which makes a nut integrated with the motor, and the lead screw passes through the center of the motor. The plunger is supported by a housing that is part of the motor. This is a complete assembly with a shaft that moves in and out. No separate supports are needed for the screw or nut.

- 5 frame sizes: NEMA08/11/14/17/23
- Each frame size has multiple motor length options
- Standardized product models for quick response

The series lead screw motors provide many advantages such as high integration, small size, quieter operation and stable product quality. The combination of lead screw motor styles, sizes, lead-screws and nuts, gives the freedom to use motors of different form factors to exactly fit in the application. And, it provides the best performance with any drive and power supply.

■Numbering System

LC	174S	–	E06008	–	25	–	S	–	XXX
①	②		③		④		⑤		⑥
Series	Motor type		Lead screw type		Stroke Code 25.4 (mm)		Customized Code S=Screw End Machining		Rated Current XXX=X.XX(A)

LC Series Configuration Table (Inch Screw)

Nominal Diameter		Lead	Lead Screw Code	Motor Options								
inch	mm	inch		LC081S	LC111S	LC143S	LC174S	LC172S	LC176S	LC234S	LC238S	LC23AS
0.138	3.51	0.024	E03006	◎								
		0.048	E03012	◎								
		0.096	E03024	◎								
0.188	4.78	1/40	E04006		◎							
		1/20	E04012		◎							
		1/10	E04025		◎							
0.218	5.54	0.024	E05006			◎	◎	◎	◎			
		0.048	E05012			◎	◎	◎	◎			
		0.192	E05048			◎	◎	◎	◎			
1/4	6.35	1/32	E06008			◎	◎	◎	◎			
		1/16	E06016			◎	◎	◎	◎			
		0.096	T06024			◎	◎	◎	◎			
		1/8	E06032			◎	◎	◎	◎			
		1/4	E06063			◎	◎	◎	◎			
		0.333	E06085			◎	◎	◎	◎			
		1/2	E06127			◎	◎	◎	◎			
0.375	9.53	1/16	E09015							◎	◎	◎
		1/10	E09025							◎	◎	◎
		1/5	E09050							◎	◎	◎
		2/5	E09102							◎	◎	◎

Note: 1.Marked with " ◎ " is available,for more configurations please contact with MOONS'.
2.The table shown is standard leadscrew options,for PTFE Coating screw please contact with MOONS'.
3. 1 inch=25.4 mm

LC Series Standard Models for stock

Size (mm)	Motor Series		Lead Screw Options		Stroke Options		End Machining Code		Rated Current Options	Page
20X20	LC081S	–	E03006 E03024	–	25	–	S	–	050	P59
28X28	LC111S	–	E04006 E04025	–	12，25，38	–	S	–	050,067,100	P61
35X35	LC143S	–	E06008 E06063 E06127	–	25	–	S	–	050,100,150	P63
42X42	LC174S	–	E06008 E06063 E06127	–	25	–	S	–	065,100,150	P65
	LC172S	–	E06008 E06063 E06127	–	25	–	S	–	100,150,200	
	LC176S	–	E06008 E06063 E06127	–	25	–	S	–	100,200	
57X57	LC234S	–	E09025 E09050 E09102	–	25	–	S	–	150,210	P68
	LC238S	–	E09025 E09050 E09102	–	25	–	S	–	220	
	LC23AS	–	E09025 E09050 E09102	–	25	–	S	–	300	

LC Series

Order sample

① Select configuration codes

Motor Series		Lead Screw Options		Stroke Options		End Machining Code		Rated Current Options
LC111S	-	E04006	-	12，25，38	-	S	-	050，067,100

② Determine the order Models

LC111S - E04006 - 25 - S - 067

In addition to the standard number, we also provide a wealth of customized configuration options, for more information please contact the factory.

LC08 Series

Phases	2
Step Accuracy	±5%
Approvals	RoHS
Operating Temp.	0°C~+50°C
Insulation Class	B(130°C)

■ Ordering Information

LC 08 1S – E03006 – 25 – S – XXX

Lead Screw Motor Type Code

Code	Structure Type
LC	Captive Shaft

Frame Size Code

Code	Frame Size
08	20mm

Lead Screw Type Code

Code	Motor Body Length Max(mm)	Step Angle (°)
1S	30	1.8

Lead Screw Type Code

Code	Nominal Diameter		Lead	Travel(mm)
	inch	mm	inch	Travel Per1.8°
E03006	0.138	3.51	0.024	0.0030*
E03012			0.048	0.0061*
E03024			0.096	0.0122*

The number with * is abbreviated.

Rated Current Code

XXX=X.XX(A)

Special Custom Type Code

Code	Custom Type
S	Lead Screw End Machining
XX	Other Special Custom Type

Stroke Code

Code	Stroke(mm)
25	25.4

Note:Choosing the standard order models can get the sample quickly, please see P58 for standard models.

■ Motor Technical Parameters

Motor Type Code	Motor Body Length (mm)	Step Angle (°)	Electrical Connection	Rated Current (Amps)
LC081S	30	1.8	Plug In Connector	0.5

Note: Driver selection recommended P87-P94

LC08 Series

■ Mating Connector With Leads

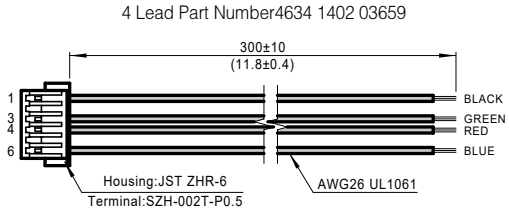

■ Dimensional Information

UNIT:mm

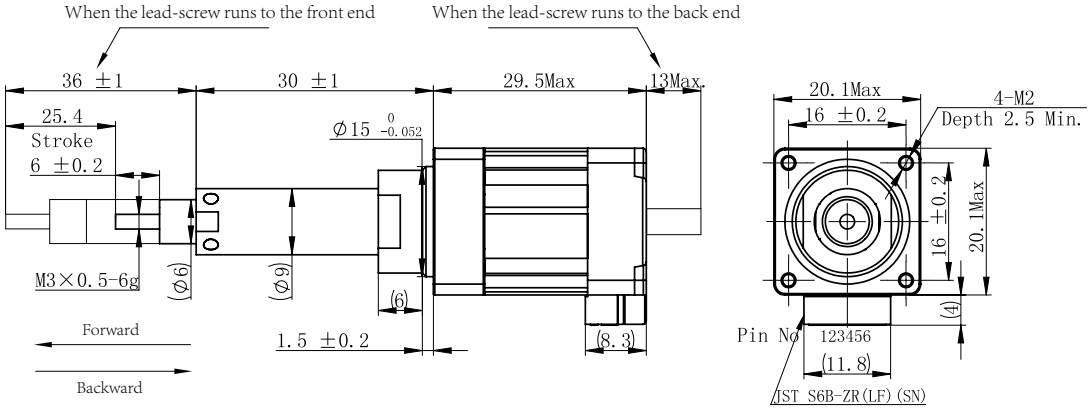

■ Speed - Force Reference Curve

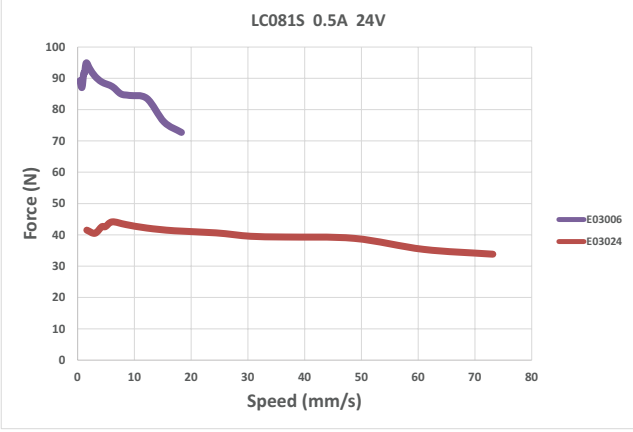

Note: The curves are reference values obtained by calculation. The actual output should consider the customer's unique application, including speed, acceleration and deceleration, frequency, stability of guidance mechanism, etc.

LC11 Series

Phases	2
Step Accuracy	±5%
Approvals	RoHS
Operating Temp.	0°C~+50°C
Insulation Class	B(130°C)

Ordering Information

LC 11 1S – E04006 – 25 – S – XXX

Lead Screw Motor Type Code

Code	Structure Type
LC	Captive Shaft

Frame Size Code

Code	Frame Size
11	28mm

Motor Body Length Code

Code	Motor Body Length Max(mm)	Step Angle (°)
1S	32	1.8

Lead Screw Type Code

Code	Nominal Diameter		Lead	Travel(mm)
	inch	mm	inch	Travel Per1.8°
E04006	0.188	4.78	1/40	0.0032*
E04012			1/20	0.0064*
E04025			1/10	0.0127*

The number with * is abbreviated.

Rated Current Code

XXX=X.XX(A)

Special Custom Type Code

Code	Custom Type
S	Lead Screw End Machining
XX	Other Special Custom Type

Stroke Code

Code	Stroke(mm)
12	12.7
25	25.4
38	38.1

Note:Choosing the standard order models can get the sample quickly, please see P58 for standard models.

Motor Technical Parameters

Motor Type Code	Motor Body Length (mm)	Step Angle (°)	Electrical Connection	Rated Current (Amps)
LC111S	32	1.8	Plug In Connector	0.67
				1

Note: Driver selection recommended P87-P94

LC11 Series

■ Mating Connector With Leads

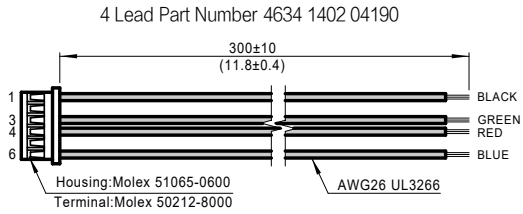

■ Dimensional Information

UNIT:mm

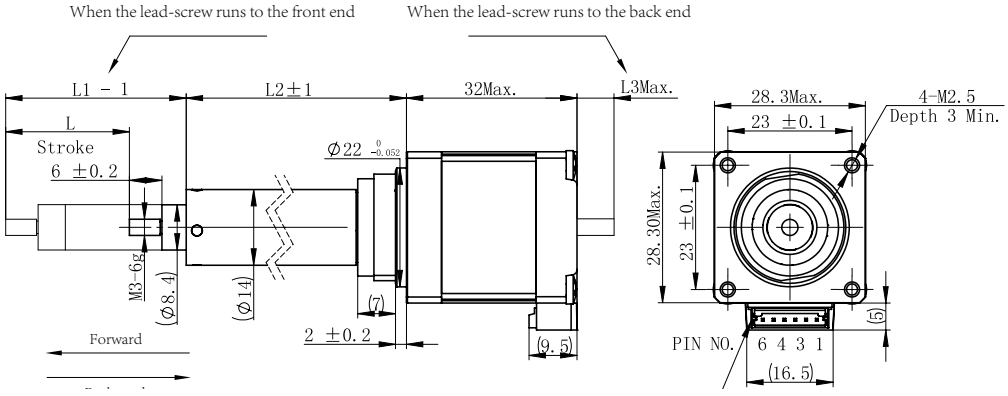

Standard stroke (mm)	L(mm)	L1(mm)	L2(mm)	L3(mm)
12.7	12.7	22	18	1
25.4	25.4	35	30.5	15
38.1	38.1	47	43	27

■ Speed - Force Reference Curve

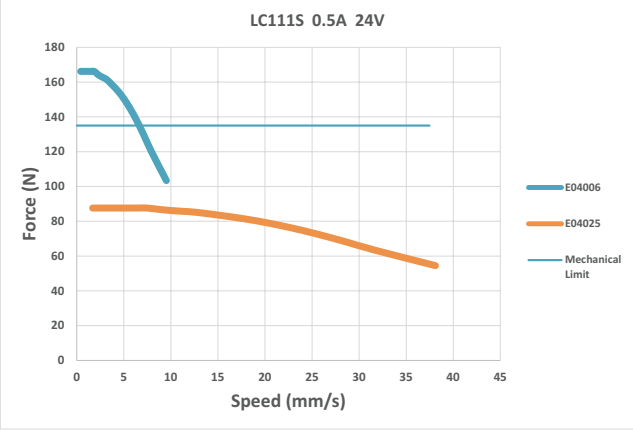

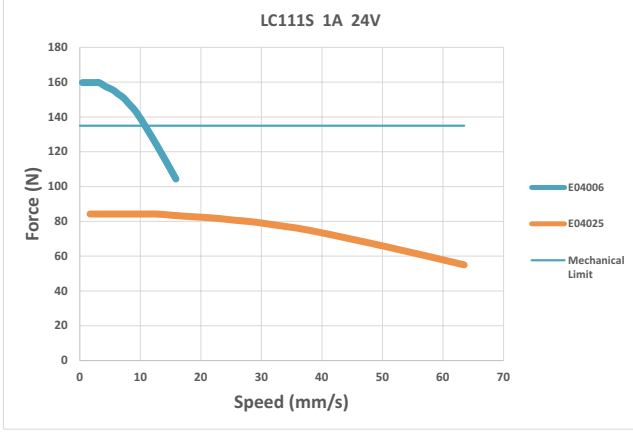

Note:
1.Mechanical Limit Definition：
Since the motor output may exceed the force which the bearing can bear, so we take the motor bearing limit as the mechanical limit. However, linear motor fatigue and resultant life are determined by each customer's unique application. Load, speed, frequency, temperature, stability of guidance mechanism, etc., should all be considered before choosing a linear motor.
2.The curves are reference values obtained by calculation. The actual output should consider the customer's unique application, including speed, acceleration and deceleration, frequency, stability of guidance mechanism, etc.

LC14 Series

Phases	2
Step Accuracy	±5%
Approvals	RoHS
Operating Temp.	0°C~+50°C
Insulation Class	B(130°C)

Ordering Information

LC 14 3S – E05006 – 25 – S – XXX

Lead Screw Motor Type Code

Code	Structure Type
LC	Captive Shaft

Frame Size Code

Code	Frame Size
14	35mm

Motor Body Length Code

Code	Motor Body Length Max(mm)	Step Angle (°)
3S	35	1.8

Lead Screw Type Code

Code	Nominal Diameter		Lead	Travel(mm)
	inch	mm	inch	Travel Per1.8°
E05006	0.218	5.54	0.024	0.0030*
E05012			0.048	0.0061*
E05048			0.192	0.0244*
E06008	0.25	6.35	1/32	0.0039*
E06016			1/16	0.0080*
T06024			0.096	0.0122*
E06032			1/8	0.0159*
E06063			1/4	0.0318*
E06085			0.333	0.0423*
E06127			1/2	0.0635

The number with * is abbreviated.

Rated Current Code

XXX=X.XX(A)

Special Custom Type Code

Code	Custom Type
S	Lead Screw End Machining
XX	Other Special Custom Type

Stroke Code

Code	Stroke(mm)
25	25.4

Note:Choosing the standard order models can get the sample quickly, please see P58 for standard models.

Motor Technical Parameters

Motor Type Code	Motor Body Length (mm)	Step Angle (°)	Electrical Connection	Rated Current (Amps)
LC143S	35	1.8	Plug In Connector	0.5
				1
				1.5

Note: Driver selection recommended P87-P94

LC14 Series

■ Mating Connector With Leads

4 Lead Part Number 4634 1402 04581

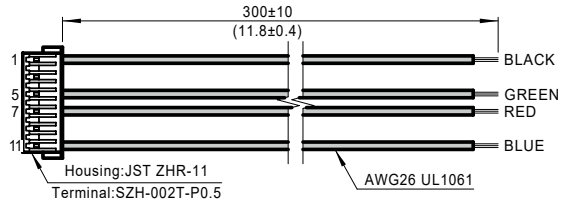

■ Dimensional Information

UNIT:mm

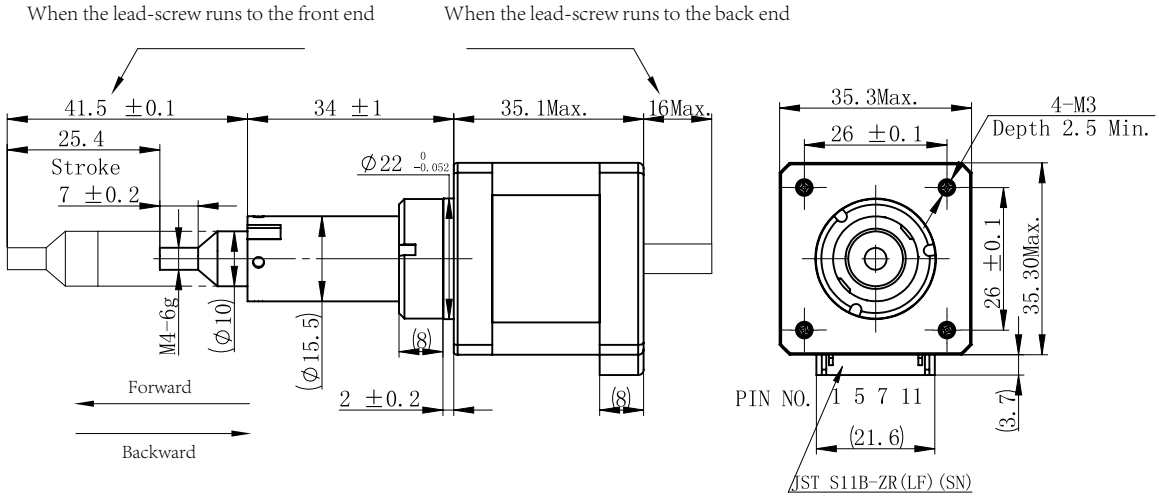

■ Speed - Force Reference Curve

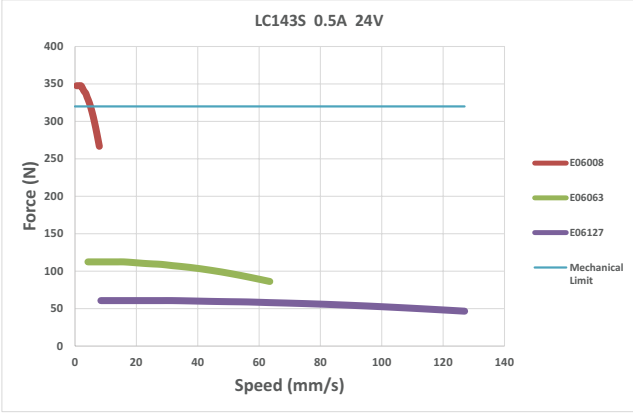

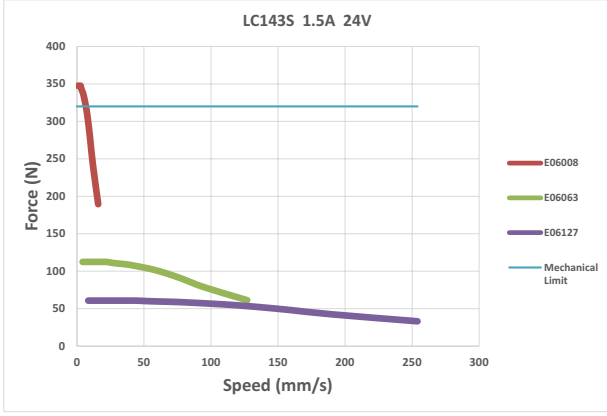

Note:
1.Mechanical Limit Definition:
Since the motor output may exceed the force which the bearing can bear, so we take the motor bearing limit as the mechanical limit. However, linear motor fatigue and resultant life are determined by each customer's unique application. Load, speed, frequency, temperature, stability of guidance mechanism, etc., should all be considered before choosing a linear motor.
2.The curves are reference values obtained by calculation. The actual output should consider the customer's unique application, including speed, acceleration and deceleration, frequency, stability of guidance mechanism, etc.

LC17 Series

Phases	2
Step Accuracy	±5%
Approvals	RoHS
Operating Temp.	0°C~+50°C
Insulation Class	B(130°C)

■ Ordering Information

LC 17 2S – E05006 – 25 – S – XXX

Lead Screw Motor Type Code

Code	Structure Type
LC	Captive Shaft

Frame Size Code

Code	Frame Size
17	42mm

Motor Body Length Code

Code	Motor Body Length Max(mm)	Step Angle (°)
4S	34	1.8
2S	40	
6S	48	

Lead Screw Type Code

Code	Nominal Diameter		Lead	Travel(mm)
	inch	mm	inch	Travel Per1.8°
E05006	0.218	5.54	0.024	0.0030*
E05012			0.048	0.0061*
E05048			0.192	0.0244*
E06008	0.25	6.35	1/32	0.0039*
E06016			1/16	0.0080*
T06024			0.096	0.0122*
E06032			1/8	0.0159*
E06063			1/4	0.0318*
E06085			0.333	0.0423*
E06127			1/2	0.0635

The number with * is abbreviated.

Rated Current Code

XXX=X.XX(A)

Special Custom Type Code

Code	Custom Type
S	Lead Screw End Machining
XX	Other Special Custom Type

Stroke Code

Code	Stroke(mm)
25	25.4

Note:Choosing the standard order models can get the sample quickly, please see P58 for standard models.

LC17 Series

■ Motor Technical Parameters

Motor Type Code	Motor Body Length (mm)	Step Angle (°)	Electrical Connection	Rated Current (Amps)
LC174S	34	1.8	Plug In Connector	0.65
				1
				1.5
LC172S	40	1.8	Plug In Connector	1
				1.5
				2
LC176S	48	1.8	Plug In Connector	1
				2

Note: Driver selection recommended P87-P94

■ Mating Connector With Leads

4 Lead Part Number 4634 1402 00723

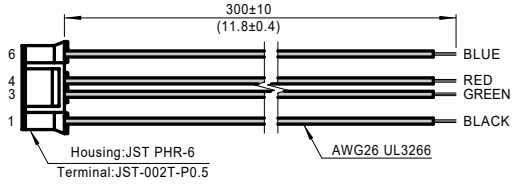

■ Dimensional Information

UNIT:mm

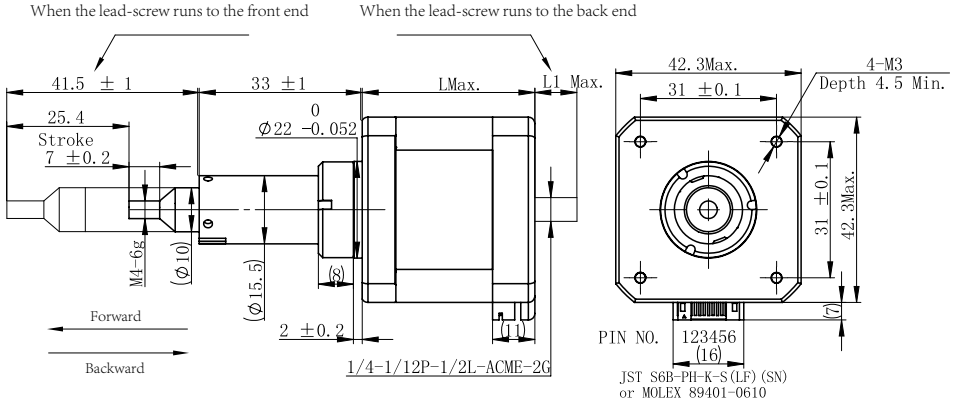

Motor Type	L(mm)	L1(mm)
LC174S	34	18
LC172S	40	13
LC176S	48	4

LC17 Series

■ Speed - Force Reference Curve

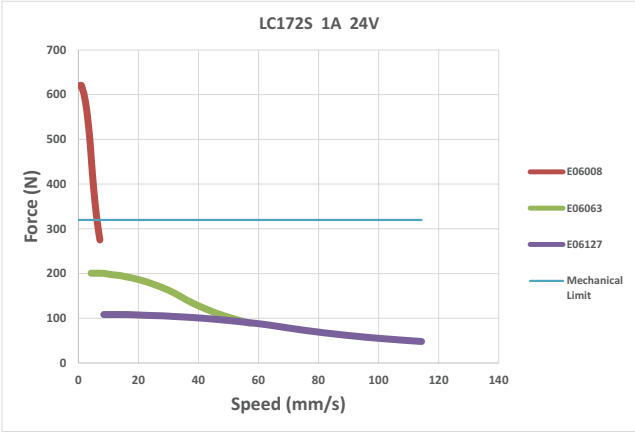

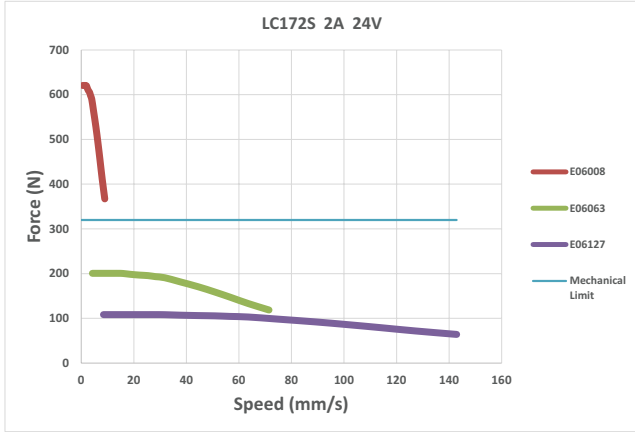

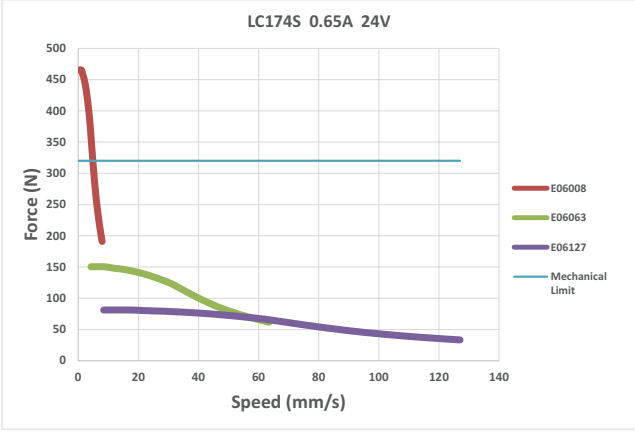

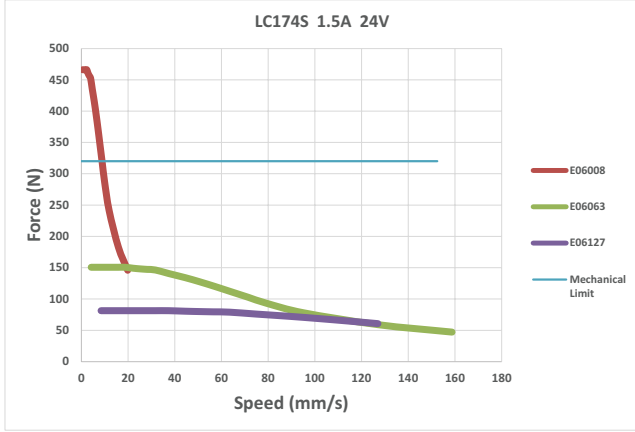

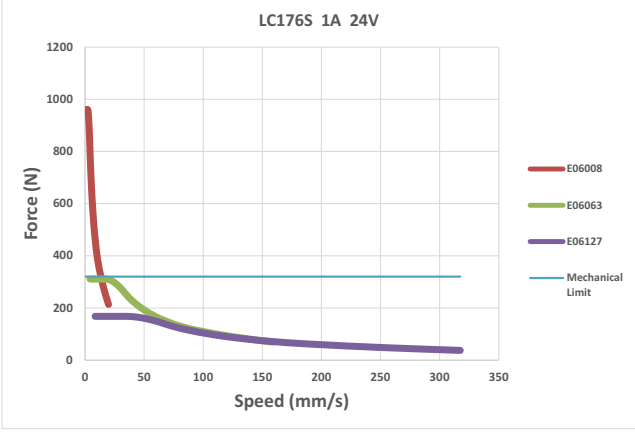

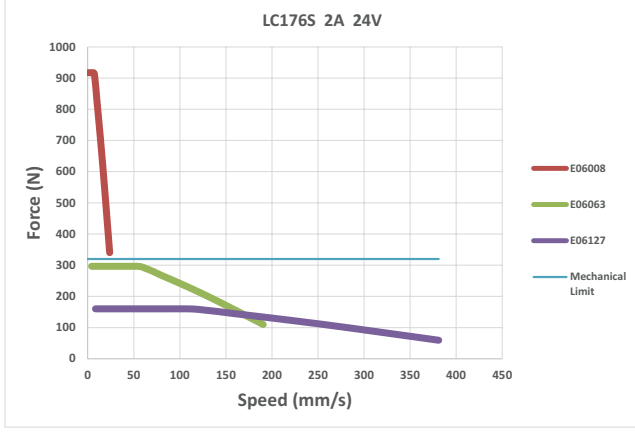

Note:
1.Mechanical Limit Definition：
Since the motor output may exceed the force which the bearing can bear, so we take the motor bearing limit as the mechanical limit. However, linear motor fatigue and resultant life are determined by each customer's unique application. Load, speed, frequency, temperature, stability of guidance mechanism, etc., should all be considered before choosing a linear motor.
2.The curves are reference values obtained by calculation. The actual output should consider the customer's unique application, including speed, acceleration and deceleration, frequency, stability of guidance mechanism, etc.

LC23 Series

Phases	2
Step Accuracy	±5%
Approvals	RoHS
Operating Temp.	0°C~+50°C
Insulation Class	B(130°C)

■ Ordering Information

LC 23 8S – E09050 – 25 – S – XXX

Lead Screw Motor Type Code

Code	Structure Type
LC	Captive Shaft

Frame Size Code

Code	Frame Size
23	57mm

Motor Body Length Code

Code	Motor Body Length Max(mm)	Step Angle (°)
4S	45	1.8
8S	57	
AS	79	

Lead Screw Type Code

Code	Nominal Diameter		Lead	Travel(mm)
	inch	mm	inch	Travel Per1.8°
E09015	0.375	9.53	1/16	0.0079*
E09025			1/10	0.0127
E09050			1/5	0.0254
E09102			2/5	0.0508*

The number with * is abbreviated.

Rated Current Code

XXX=X.XX(A)

Special Custom Type Code

Code	Custom Type
S	Lead Screw End Machining
XX	Other Special Custom Type

Stroke Code

Code	Stroke(mm)
25	25.4

Note:Choosing the standard order models can get the sample quickly, please see P58 for standard models.

LC23 Series

Motor Technical Parameters

Motor Type Code	Motor Body Length (mm)	Step Angle (°)	Electrical Connection	Rated Current (Amps)
LC234S	45	1.8	Plug In Connector	1.5
				2.1
LC238S	57	1.8	Plug In Connector	1.5
				2.2
LC23AS	79	1.8	Plug In Connector	1.5
				3

Note: Driver selection recommended P87-P94

Mating Connector With Leads

4 Lead Part Number 4634 1402 01891

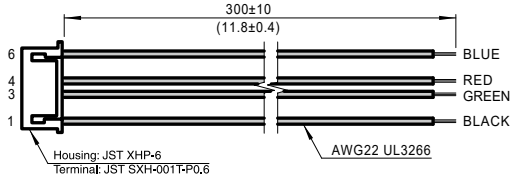

Dimensional Information

UNIT:mm

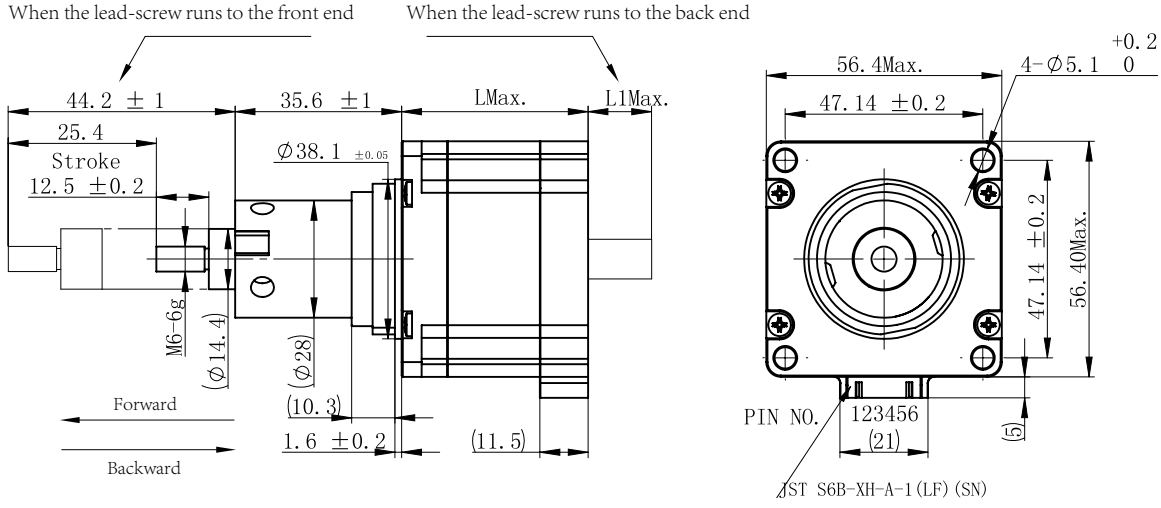

Motor Type	L(mm)	L1(mm)
LC234S	45	13
LC238S	57	1
LC23AS	79	0

LC Series

LC23 Series

■ Speed - Force Reference Curve

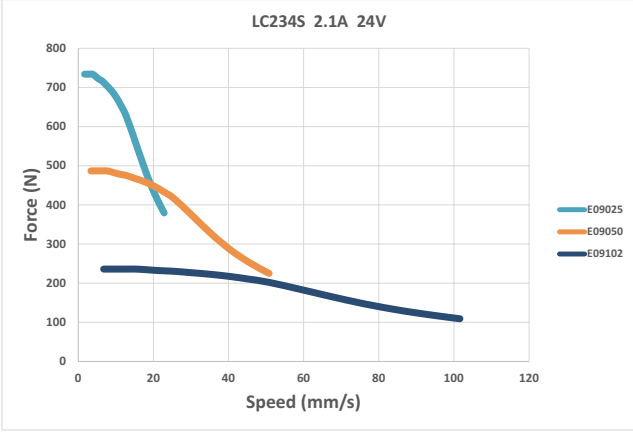

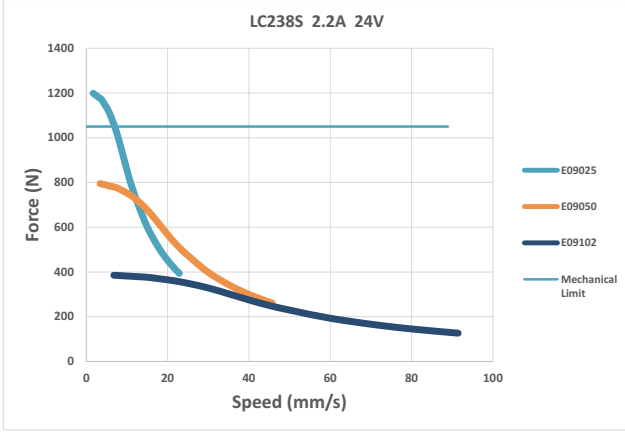

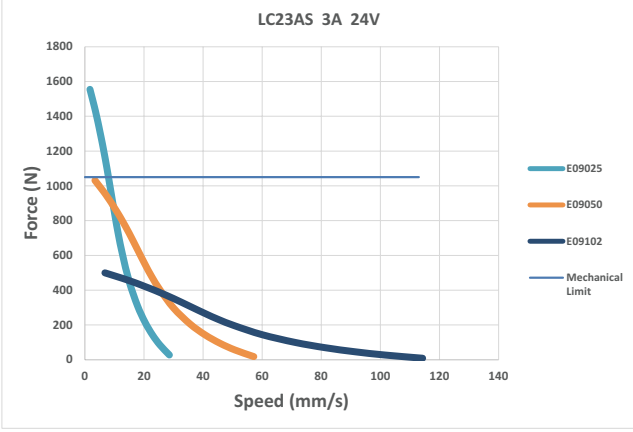

Note:

1.Mechanical Limit Definition：
Since the motor output may exceed the force which the bearing can bear, so we take the motor bearing limit as the mechanical limit. However, linear motor fatigue and resultant life are determined by each customer's unique application. Load, speed, frequency, temperature, stability of guidance mechanism, etc., should all be considered before choosing a linear motor.

2.The curves are reference values obtained by calculation. The actual output should consider the customer's unique application, including speed, acceleration and deceleration, frequency, stability of guidance mechanism, etc.

Linear Slides(Lead screws)

MOONS' Linear Slides are designed to fit the requirement of customer for compact structure. These products not only provide many advantages such as high integration, small size, quieter operation, stable product quality and lower cost,but also easier to assembly.

- 2 structure types(MS& CS Series): reduce installation space from different directions.
- 3 sizes motor options: NEMA11/14/17
- Each size of Linear Slides has a variety of lead options.
- Each size of Linear Slides has encoder & brake options.

MOONS' has committed to product innovation design and technical improvement, with excellent product quality, application technology, fast and flexible services, which provide customers with high level motion control solutions, help customers shorten the cycle of new products development and the time of system assembly in the mass production process (labor cost), so as to reduce the overall cost.

MS28 Series

MS35 Series

MS42 Series

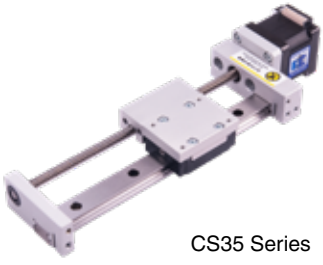

CS35 Series

CS42 Series

Application Information

Operating Frequency

The transmission type of the linear slides is sliding friction, so using in low operating frequency application is recommended. (Reference standard: 10 s/cycle, 8 h/day)

Instructions for Vertical Installation

When the slides are installed vertically, the slider may slip freely and cause injury to equipment or personnel with power failure. Therefore, self-locking force should be fully considered when the slides are used vertically. If the self-locking force cannot overcome the free slip of the load, consideration should be given to adding brakes.
For the lead screws:
With a lead-to-diameter ratio of less than 1:3, the slides are generally fully self-locking.
With a lead-to-diameter ratio of greater than 1:3, the module has a certain self-locking force.
If you want to calculate the self-locking force, please contact the factory.

Applicability Statement

The structure of this series is simple, and the transmission type of the products is sliding friction.Compared with ball screw type,its' precision performance and impact resistance are not good enough.
The maximum load is shown below:

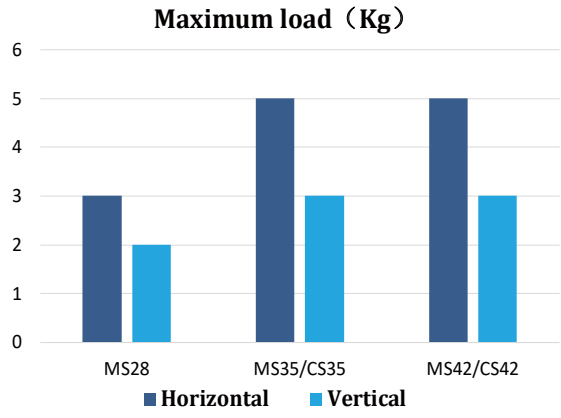

Due to the sliding friction between the nut and the lead screw, dust and debris will be generated to a certain extent during the normal operation of the slides. If you need to use it in a dust-free environment, please contact the factory.

Repeatability

The slides have 2 nut options: standard nut or anti-backlash nut.
Using the standard nut, the repeatability of the slides is ±0.05mm.
Using the anti-backlash nut, the repeatability of the slides is ±0.02mm.
For higher precision products, please contact the factory.

Lubrication

The effect of lubricating: restrain friction, reduce temperature rise, improve efficiency, reduce noise, increase operating life, etc.
Grease has been applied to the lead screw before deliver. If grease is not needed, please contact the factory in advance.
(The reference grease: the base oil is synthetic oil, and the consistency grade is No. 2 lithium-based grease)

Operating Environment

Recommend working condition:
temperature range 0~40℃ ,
Humidity 85%RH below (no condensation).
Acid-base free environment.
If you need to use in special environment, please contact the factory.

Application Information

Installation reference surface requirements

The installation reference surface must be ground or fine milling processing, in order to achieve the flatness of 0.05mm/m and surface roughness within Ra1.6, otherwise it may appear that the operation is not smooth, noise, jitter and other conditions.

Smoothness Checking

The slides shall be checked for smoothness after installation. Use a screwdriver or a torsion meter to test the rotational torque through a slot before running on power. The torque values of the lead screw are close to each other within the range of travel is perfect. Grease has been applied to the lead screw before deliver. After running for a period of time, grease should be replenished regularly according to the specific situation.

Electricity debugging

Use a screwdriver or a torsion meter to test the rotational torque through a slot before running on power.
Please check the drive current carefully before running on power. Recommending drive current setting equal to or slightly less than rated current. Driving current is too high may burn out the motor, driving current is too low may make torque is insufficient or lead to step loss or blocking.
Please pay attention to the reasonable setting of acceleration and deceleration (less than 0.3g is recommended). Exceptional acceleration and deceleration may likely to cause blocking and step loss. It is prohibited to start device without setting acceleration and deceleration.
In the process of module installation, debugging and use, try to avoid the impact of the sliding seat on the end blocks at both ends. Otherwise, the end blocks may become loose, the lead screws bend, and the concentricity is inconsistent. Otherwise it may cause unsmooth operation, abnormal sound, thrust reduced, accuracy reduced, vibration, etc.

Storage and Safekeeping

Please storage the slides horizontally and keep the environment dry. The grease on the lead screw surface may volatilize and condense if storage for a long time, so it is recommended that the storage time should not exceed three months.

MS/CS Series Standard Models for stock

Size (mm)	Product series code		Motor Series code		Screw the nut Configuration code		Effective stroke code		Standard code	Page
29X38	MS28	–	3D10T	–	LAB1 LAB2 LAC1 LAC2 LAE1 LAE2 LAH1 LAH2	–	30, 60, 90, 120	–	0	P75
36X45	MS35	–	3C20T	–	LAB1 LAB2 LAC1 LAC2 LAE1 LAE2 LAH1 LAH2	–	50, 100, 150	–	0	P77
42X50	MS42	–	3A10T	–	LAR1 LAR2 LBH1 LBH2 LBX1 LBX2 LCG1 LCG2	–	50, 100, 150, 200	–	0	P79
36X45	CS35	–	3C20T	–	LAB1 LAB2 LAC1 LAC2 LAE1 LAE2 LAH1 LAH2	–	50, 100, 150	–	0	P81
42X50	CS42	–	3A10T	–	LAR1 LAR2 LBH1 LBH2 LBX1 LBX2 LCG1 LCG2	–	50, 100, 150, 200	–	0	P83

Order sample

① Select configuration codes

Product series code		Motor Series code		Screw the nut Configuration code		Effective stroke code		Standard code
MS28	–	3D10T	–	LAB1	–	30, 60, 90, 120	–	0

② Determine the order Models

MS28 – 3D10T – LAB1 – 60 – 0

In addition to the standard number, we also provide a wealth of customized configuration options, for more information please contact the factory.

MS28 Series

- **Integrated design, Easy installation**
- **Small Size, Width 29mm**
- **Anti-Backlash technology, High repeatability**

Ordering Information

MS28 - 3D1 0 T - L AE 1 - XX - 0

Series Code

Code	Mating Motor
MS28	NEMA11

Motor Length Code

Code	Motor Length Max(mm)
3D1	32 (LE111S)

Additional Options Code

Code	Additional Options
0	No additional
B	Brake
E	Encoder

The standard models have no additional options, any additional customization please contact the manufacturer.

Outlet Direction Code

Code	Outlet Direction
T	Top
B	Bottom
L	Left
R	Right

The standard outlet direction is from top side, any outlet direction customization please contact the manufacturer.

Screw Type Code

Code	Screw Type
L	Standard Leadscrews

Special Custom Type Code

Code	Custom Type
0	Standard Code
XX	Special custom code

For customization, please contact the manufacturer

Stroke Options (mm)

###	Options: 30,60,90,120

The above is the standard optional itinerary, if you need to customize, please contact the manufacturer

Nut Type Code

Code	Nut Type
1	Standard Nut
2	Anti-Backlash Nut

The standard configure is standard nut, any anti–backlash customization please contact the manufacturer.

Lead code

Code	Lead (mm)
AH	1
AE	3
AB	6.35
AC	12.7

The above is the standard product optional lead, if you need to customize please contact the manufacturer

Note: Choosing the standard order models can get the sample quickly, please see P74 for standard models.

MS28 Series

■ Technical Parameters

Product series	Maximum Stroke (mm)	Guide wide (mm)	Repeat accuracy (mm)	Lead code	Lead (mm)	Maximum speed (mm/s)	Maximum load (kg) Motor: LE113S	
							Horizontal	Vertical
MS28	120	12	Standard nut: ±0.05 Anti–Backlash Nut: ±0.02	AH	1	10	3	2
				AE	3	30	3	2
				AB	6.35	63.5	1.8	1.2
				AC	12.7	127	1	0.6

Note: Driver selection recommended P87–P94

■ Dimensional Information

UNIT:mm

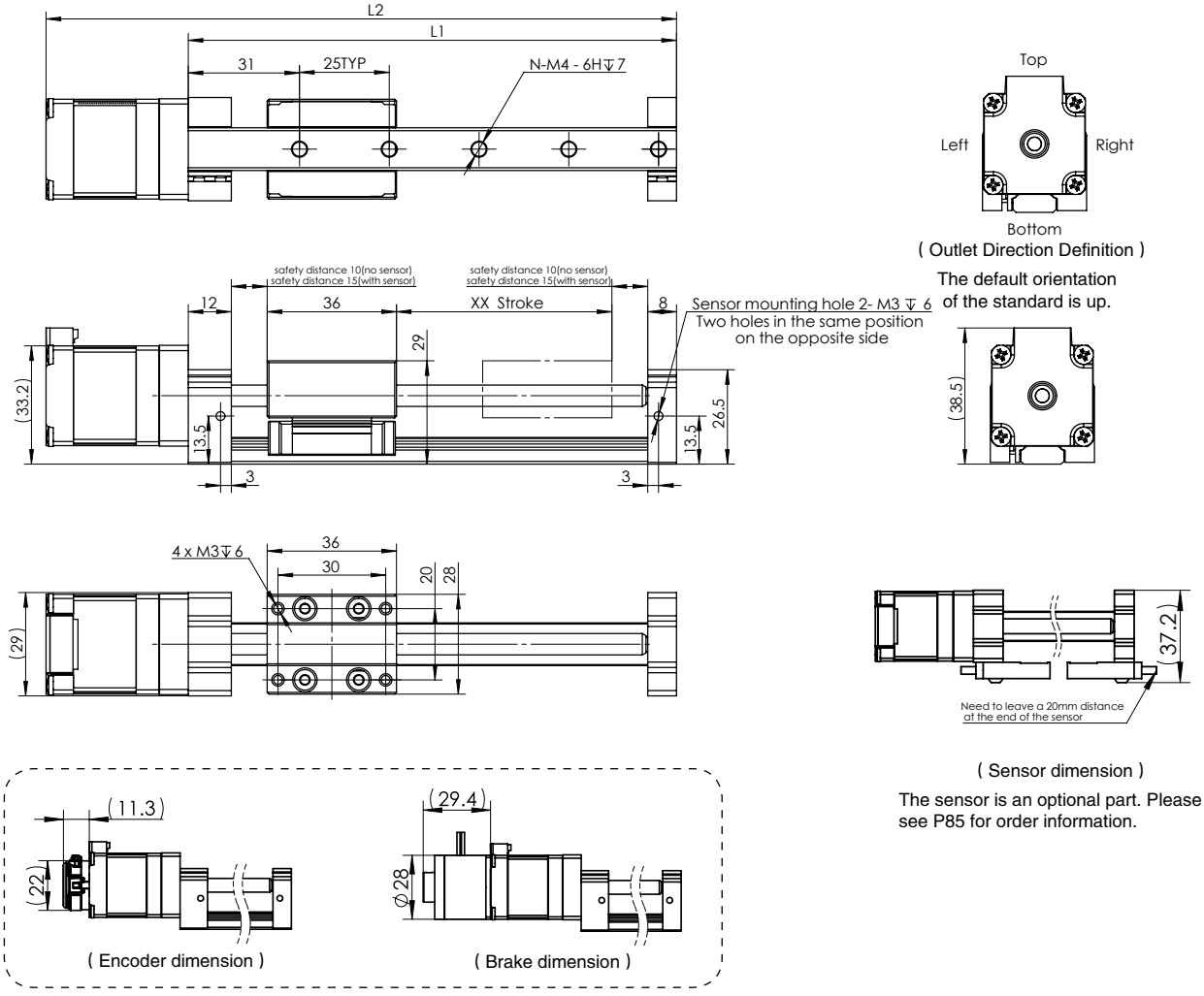

Encoder/brake are additional options for manufactured motors, see P33–34 for details.

Standard trip (mm)	30	60	90	120
N	3	5	6	7
L1 (mm)	106	136	166	196
L2 (mm)	145.6	175.6	205.6	235.6
Weight (KG)	0.2	0.27	0.35	0.42

Note: The standard does not have a sensor by default. The effective stroke should be reduced by 5mm when installing one sensor. A maximum of two sensors can be installed.

MS35 Series

- **Integrated design, Easy installation**
- **Small Size, Width 36mm**
- **Anti-Backlash technology, High repeatability**

Ordering Information

MS35 - 3C2 0 T - L AE 1 - XX - 0

Series Code

Code	Mating Motor
MS35	NEMA14

Motor Length Code

Code	Motor Length Max(mm)
3C2	36 (LE143S)

Additional Options Code

Code	Additional Options
0	No additional
B	Brake
E	Encoder

The standard models have no additional options, any additional customization please contact the manufacturer.

Outlet Direction Code

Code	Outlet Direction
T	Top
B	Bottom
L	Left
R	Right

The standard outlet direction is from top side, any outlet direction customization please contact the manufacturer.

Screw Type Code

Code	Screw Type
L	Standard Leadscrews

Special Custom Type Code

Code	Custom Type
0	Standard Code
XX	Special custom code

For customization, please contact the manufacturer

Stroke Options (mm)

###	Options: 50,100,150

The above is the standard optional itinerary, if you need to customize, please contact the manufacturer

Nut Type Code

Code	Nut Type
1	Standard Nut
2	Anti-Backlash Nut

The standard configure is standard nut, any anti–backlash customization please contact the manufacturer.

Lead code

Code	Lead (mm)
AH	1
AE	3
AB	6.35
AC	12.7

The above is the standard product optional lead, if you need to customize please contact the manufacturer

Note: Choosing the standard order models can get the sample quickly, please see P74 for standard models.

MS35 Series

■ Technical Parameters

Product series	Maximum Stroke (mm)	Guide wide (mm)	Repeat accuracy (mm)	Lead code	Lead (mm)	Maximum speed (mm/s)	Maximum load (kg) Motor: LE143S	
							Horizontal	Vertical
MS35	150	15	Standard nut: ±0.05 Anti-Backlash Nut: ±0.02	AH	1	10	5	3
				AE	3	30	5	3
				AB	6.35	63.5	4.5	3
				AC	12.7	127	2.4	1.6

Note: Driver selection recommended P87–P94

■ Dimensional Information

UNIT:mm

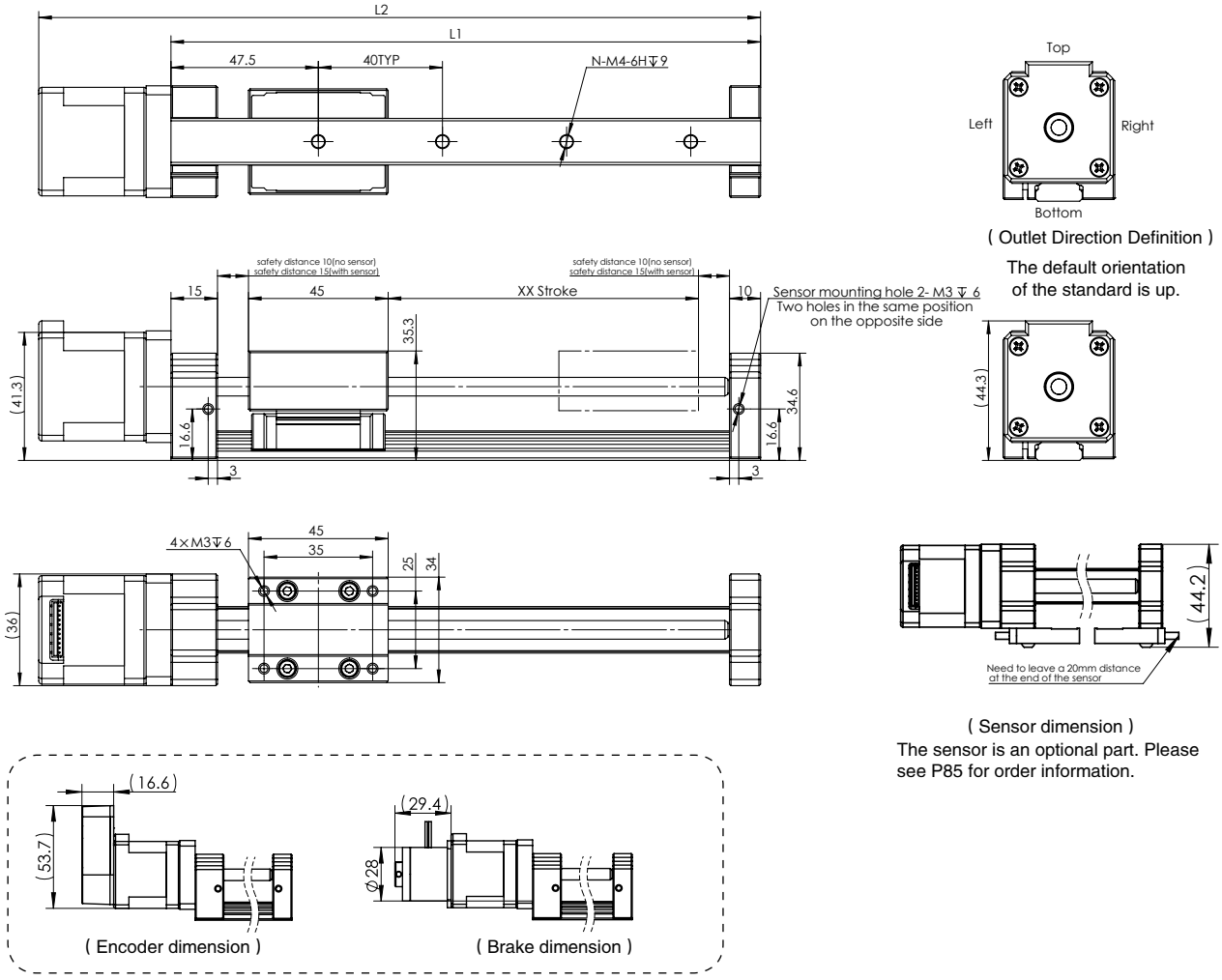

Encoder/brake are additional options for manufactured motors, see P33–34 for details.

Standard trip (mm)	50	100	150
N	3	4	5
L1 (mm)	140	190	240
L2 (mm)	182.6	232.6	282.6
Weight (KG)	0.4	0.6	0.8

Note: The standard does not have a sensor by default. The effective stroke should be reduced by 5mm when installing one sensor. A maximum of two sensors can be installed.

MS42 Series

- **Integrated design, Easy installation**
- **Small Size, Width 42mm**
- **Anti-Backlash technology, High repeatability**

Ordering Information

MS42 - 3A1 0 T - L AR 1 - XX - 0

Series Code

Code	Mating Motor
MS42	NEMA17

Motor Length Code

Code	Motor Length Max(mm)
3A1	39.8 (LE172S)

Additional Options Code

Code	Additional Options
0	No additional
B	Brake
E	Encoder

The standard models have no additional options, any additional customization please contact the manufacturer.

Outlet Direction Code

Code	Outlet Direction
T	Top
B	Bottom
L	Left
R	Right

The standard outlet direction is from top side, any outlet direction customization please contact the manufacturer.

Screw Type Code

Code	Screw Type
L	Standard Leadscrews

Special Custom Type Code

Code	Custom Type
0	Standard Code
XX	Special custom code

For customization, please contact the manufacturer

Stroke Options (mm)

###	Options: 50,100,150

The above is the standard optional itinerary, if you need to customize, please contact the manufacturer

Nut Type Code

Code	Nut Type
1	Standard Nut
2	Anti-Backlash Nut

The standard configure is standard nut, any anti–backlash customization please contact the manufacturer.

Lead code

Code	Lead (mm)
CG	1.25
AR	4
BH	8
BX	10.5

The above is the standard product optional lead, if you need to customize please contact the manufacturer

Note: Choosing the standard order models can get the sample quickly, please see P74 for standard models.

MS42 Series

■ Technical Parameters

Product series	Maximum Stroke (mm)	Guide wide (mm)	Repeat accuracy (mm)	Lead code	Lead (mm)	Maximum speed (mm/s)	Maximum load (kg) Motor: LE172S	
							Horizontal	Vertical
MS42	200	15	Standard nut: ±0.05 Anti–Backlash Nut: ±0.02	CG	1.25	12.5	5	3
				AR	4	40	5	3
				BH	8	80	5	3
				BX	10.5	105	5	3

Note: Driver selection recommended P87–P94

■ Dimensional Information

UNIT:mm

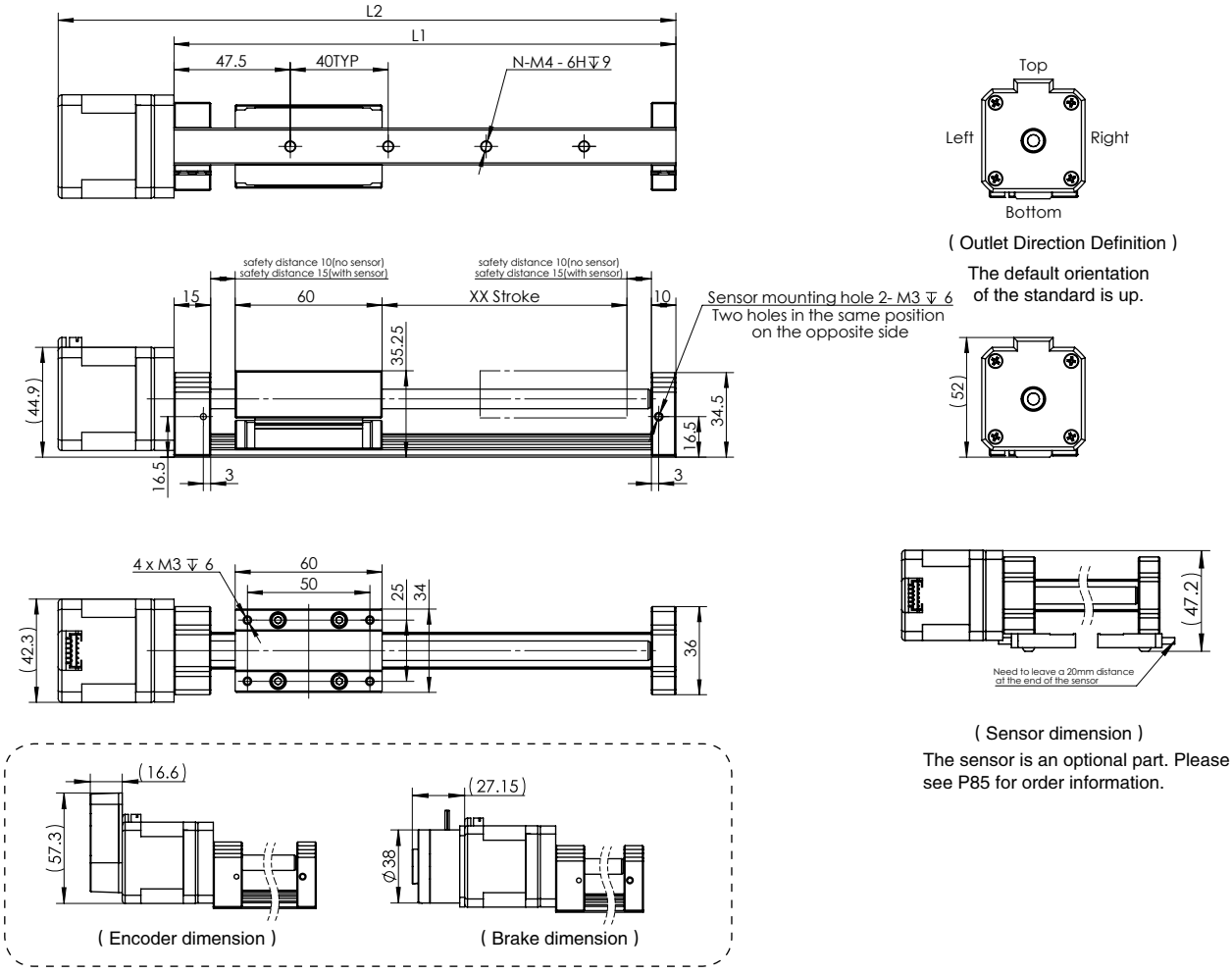

Encoder/brake are additional options for manufactured motors, see P33–34 for details.

Standard trip (mm)	50	100	150	200
N	3	4	6	7
L1 (mm)	155	205	255	305
L2 (mm)	202.3	252.3	302.3	352.3
Weight (KG)	0.8	0.85	0.9	1

Note: The standard does not have a sensor by default. The effective stroke should be reduced by 5mm when installing one sensor. A maximum of two sensors can be installed.

CS35 Series

- **Integrated design, Easy installation**
- **Small Size, Height 23mm**
- **Anti-Backlash technology, High repeatability**

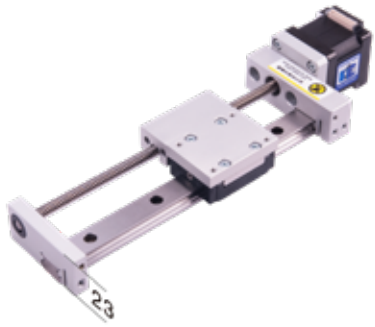

Ordering Information

CS35 - 3C2 0 T - L AE 1 - XX - 0

Series Code

Code	Mating Motor
CS35	NEMA14

Motor Length Code

Code	Motor Length Max(mm)
3C2	36 (LE143S)

Additional Options Code

Code	Additional Options
0	No additional
B	Brake
E	Encoder

The standard models have no additional options, any additional customization please contact the manufacturer.

Outlet Direction Code

Code	Outlet Direction
T	Top
B	Bottom
L	Left
R	Right

The standard outlet direction is from top side, any outlet direction customization please contact the manufacturer.

Screw Type Code

Code	Screw Type
L	Standard Leadscrews

Special Custom Type Code

Code	Custom Type
0	Standard Code
XX	Special custom code

For customization, please contact the manufacturer

Stroke Options (mm)

###	Options: 50,100,150

The above is the standard optional itinerary, if you need to customize, please contact the manufacturer

Nut Type Code

Code	Nut Type
1	Standard Nut
2	Anti-Backlash Nut

The standard configure is standard nut, any anti–backlash customization please contact the manufacturer.

Lead code

Code	Lead (mm)
AH	1
AE	3
AB	6.35
AC	12.7

The above is the standard product optional lead, if you need to customize please contact the manufacturer

Note: Choosing the standard order models can get the sample quickly, please see P74 for standard models.

CS35 Series

■ Technical Parameters

Product series	Maximum Stroke (mm)	Guide wide (mm)	Repeat accuracy (mm)	Lead code	Lead (mm)	Maximum speed (mm/s)	Maximum load (kg) Motor: LE143S	
							Horizontal	Vertical
CS35	150	15	Standard nut: ±0.05 Anti–Backlash Nut: ±0.02	AH	1	10	5	3
				AE	3	30	5	3
				AB	6.35	63.5	4.5	3
				AC	12.7	127	2.4	1.6

Note: Driver selection recommended P87–P94

■ Dimensional Information

UNIT:mm

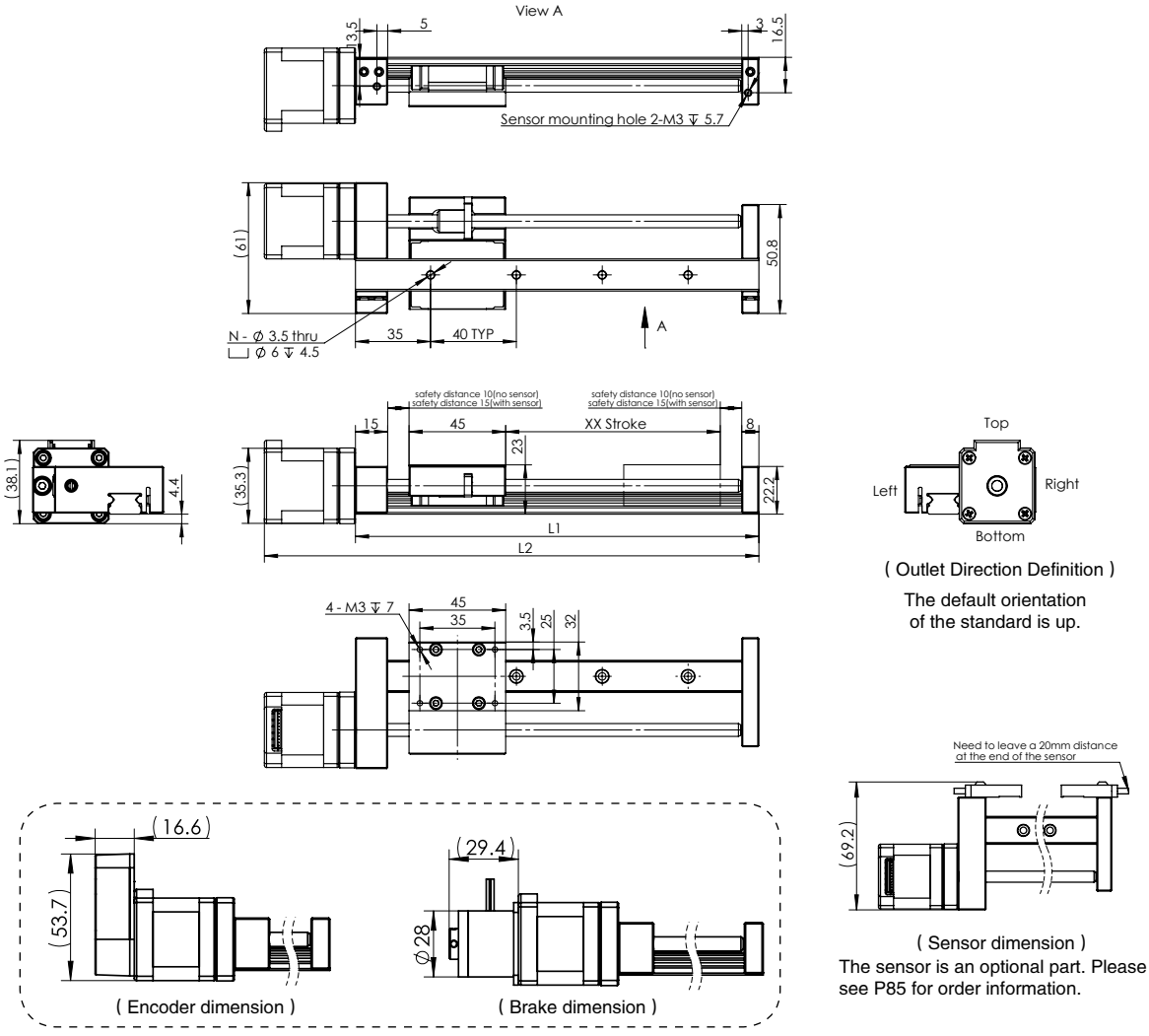

(Outlet Direction Definition)

The default orientation of the standard is up.

(Encoder dimension)

(Brake dimension)

(Sensor dimension)

The sensor is an optional part. Please see P85 for order information.

Encoder/brake are additional options for manufactured motors, see P33–34 for details.

Standard trip (mm)	50	100	150
N	3	4	5
L1 (mm)	138	188	238
L2 (mm)	180.4	230.4	280.4
Weight (KG)	0.5	0.6	0.7

Note: The standard does not have a sensor by default. The effective stroke should be reduced by 5mm when installing one sensor. A maximum of two sensors can be installed.

CS42 Series

- **Integrated design, Easy installation**
- **Small Size, Height 23mm**
- **Anti-Backlash technology, High repeatability**

■ Ordering Information

CS42 - 3A1 0 T - L AR 1 - XX - 0

Series Code

Code	Mating Motor
CS42	NEMA17

Motor Length Code

Code	Motor Length Max(mm)
3A1	39.8 (LE172S)

Additional Options Code

Code	Additional Options
0	No additional
B	Brake
E	Encoder

The standard models have no additional options, any additional customization please contact the manufacturer.

Outlet Direction Code

Code	Outlet Direction
T	Top
B	Bottom
L	Left
R	Right

The standard outlet direction is from top side, any outlet direction customization please contact the manufacturer.

Screw Type Code

Code	Screw Type
L	Standard Leadscrews

Special Custom Type Code

Code	Custom Type
0	Standard Code
XX	Special custom code

For customization, please contact the manufacturer

Stroke Options (mm)

###	Options: 50,100,150,200

The above is the standard optional itinerary, if you need to customize, please contact the manufacturer

Nut Type Code

Code	Nut Type
1	Standard Nut
2	Anti-Backlash Nut

The standard configure is standard nut, any anti–backlash customization please contact the manufacturer.

Lead code

Code	Lead (mm)
CG	1.25
AR	4
BH	8
BX	10.5

The above is the standard product optional lead, if you need to customize please contact the manufacturer

Note: Choosing the standard order models can get the sample quickly, please see P74 for standard models.

CS42 Series

■ Technical Parameters

Product series	Maximum Stroke (mm)	Guide wide (mm)	Repeat accuracy (mm)	Lead code	Lead (mm)	Maximum speed (mm/s)	Maximum load (kg) Motor: LE172S	
							Horizontal	Vertical
CS42	200	15	Standard nut: ±0.05 Anti–Backlash Nut: ±0.02	CG	1.25	12.5	5	3
				AR	4	40	5	3
				BH	8	80	5	3
				BX	10.5	105	5	3

Note: Driver selection recommended P87–P94

■ Dimensional Information

UNIT:mm

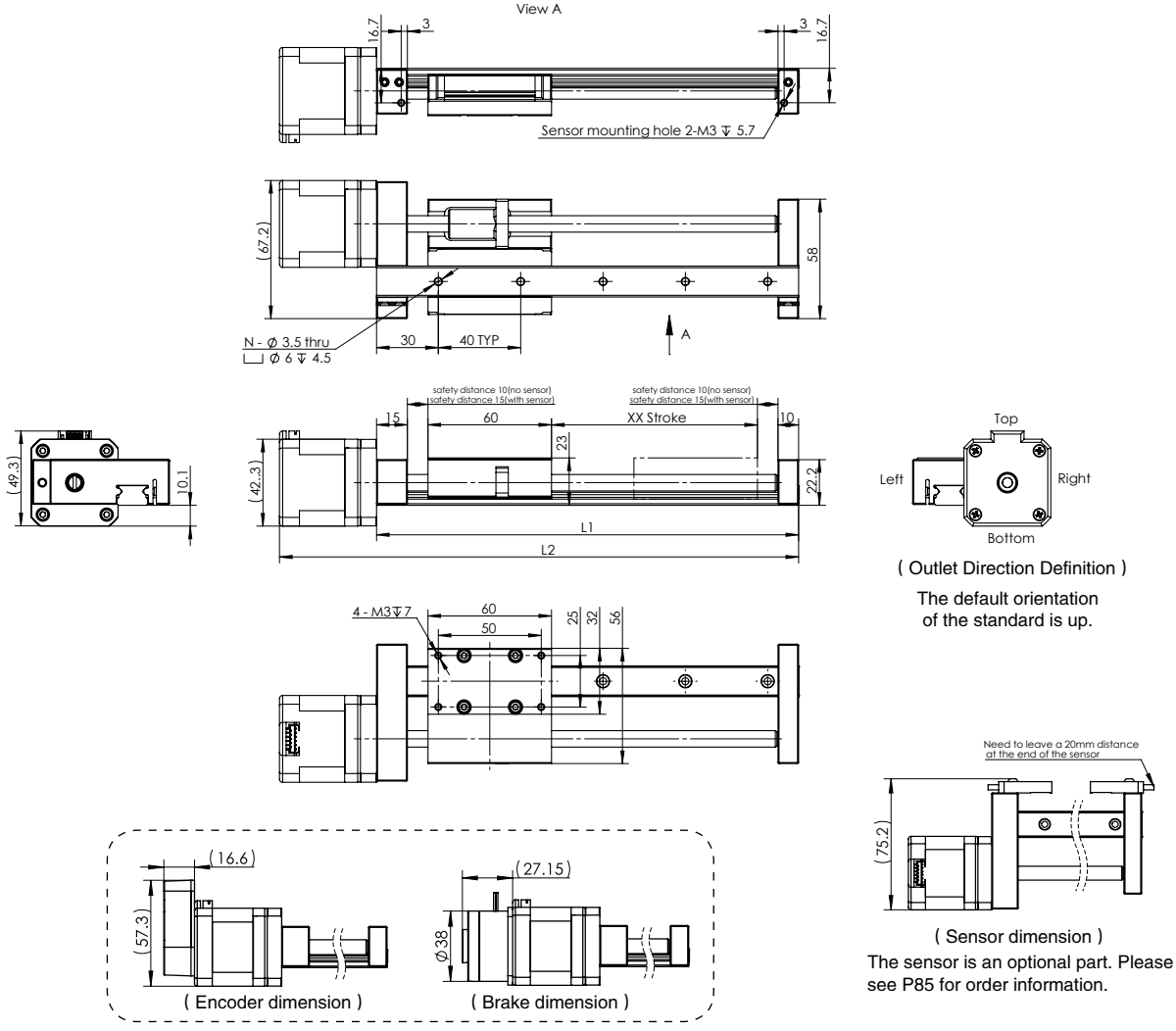

(Outlet Direction Definition)

The default orientation of the standard is up.

(Sensor dimension)

The sensor is an optional part. Please see P85 for order information.

(Encoder dimension) (Brake dimension)

Encoder/brake are additional options for manufactured motors, see P33–34 for details.

Standard trip (mm)	30	60	90	120
N	3	5	6	7
L1 (mm)	106	136	166	196
L2 (mm)	145.6	175.6	205.6	235.6
Weight (KG)	0.2	0.27	0.35	0.42

Note: The standard does not have a sensor by default. The effective stroke should be reduced by 5mm when installing one sensor. A maximum of two sensors can be installed.

Sensor (order separately)

Parameters

Type	NPN output/PNP output	**Size**	6.5 X 12 X 27
Sensing range	4mm ± 10%	**Circuit protection**	Polarity protection,Short–circuit Protection
Pre–set distance	3.2mm	**Leakage current**	＜ 100uA
Range of backlash	1%~15% of detecting–distance	**Operation indicator**	red LED
Repeatability	＜ 5% of detecting–distance	**Cable**	Lead out type，standard leads 2m
Response frequency	1KHz	**Ambient temperature**	As using and preserving,–25℃—70℃
Standard detector	12X12X1t , Q235A steel plate	**Ambient humidity**	As using and preserving,35~95% RH
Supply Voltage	DC12~24V Ripple,under(P–P)10%	**Vibration(endurance)**	10~50Hz amplitude,1.5mm X,Y,Z
Current consumption	＜ 10mA	**Voltage with standability**	1,000V AC for one min.,50/60Hz
Voltage effect	<3%	**Insulation resistance**	＞ 100MΩ(DC500V Meggern)
Load current	<100mA	**Protection**	IP67(IEC)
Residual voltage	＜ 2V （Load current 100mA，leads 2m ）	**Enclosure**	PC

Dimensional Information

UNIT:mm

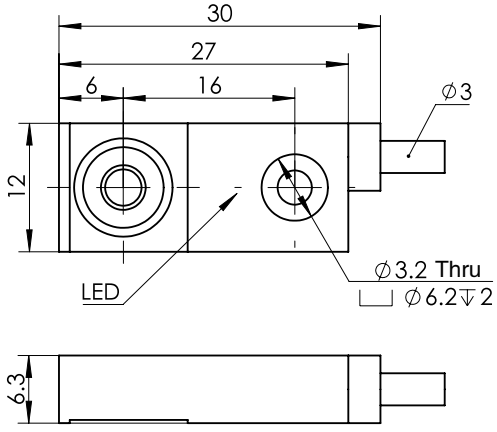

Wiring Diagram

NPN output

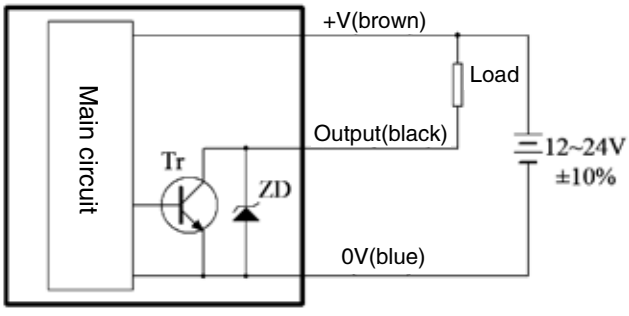

PNP output

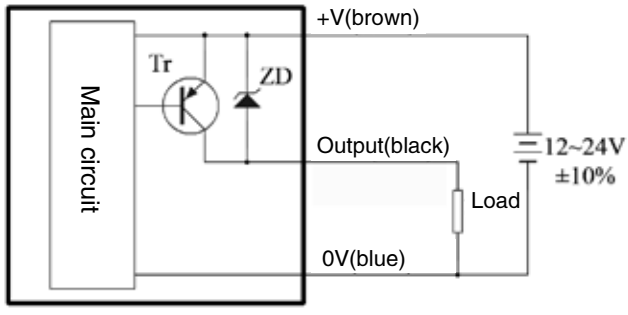

Sensor (order separately)

■ Installation instructions

・ Installation tool：Hex Key Wrench(M3)

・ Mounting

The sensor mounting holes have been reserved on the side of the linear module. Please install the sensor according to the picture below.

Note: The MS series have sensor mounting holes on the double side, the CS series only have sensor mounting holes on the one side.

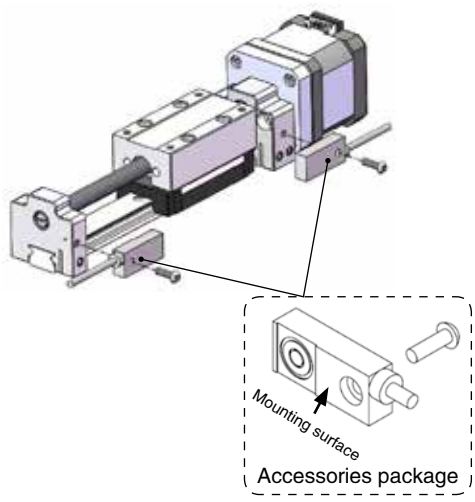

MS series

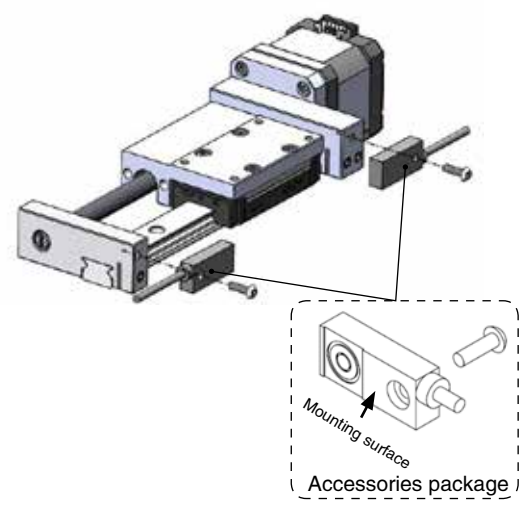

CS series

■ Ordering model

Accessories package

Ordering model	Accessories	Matching products
PJB–SE12F04NO	NPN type sensor x1, M3 screw x1, M3 nut x1	CS/MS series
PJB–SE12F04PO	PNP type sensor x1, M3 screw x1, M3 nut x1	CS/MS series

Note: Please order the accessories package separately for sensors, and sensor need installation by customer.

DC Input Stepper Drive-SR Series

SR Series Drives

The SR series are compact, powerful, digital stepper drives feature advanced microstepping performance and sophisticated current control.All drive setup is done via dip or rotary switches.

- Advanced Current Control
- Anti-Resonance
- Torque Ripple Smoothing
- Microstep Emulation
- Self Test

■ Features

Anti-Resonance

Step motor systems have a natural tendency to resonate at certain speeds. The SR drives automatically calculate the system's natural frequency and apply damping to the control algorithm. This greatly improves midrange stability, allows higher speeds and greater torque utilization, and also improves settling times.

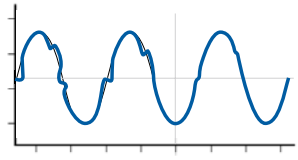

Provides better motor performance and higher speeds

Microstep Emulation

With Microstep Emulation, low resolution systems can still provide smooth motion. The drive can take low resolution step pulses and create fine resolution motion.

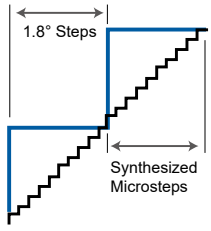

Delivers smoother motion in any application

Torque Ripple Smoothing

All step motors have an inherent low speed torque ripple that can affect the motion profile of the motor. By analyzing this torque ripple the system can apply a negative harmonic to counter this effect. This gives the motor much smoother motion at low speed.

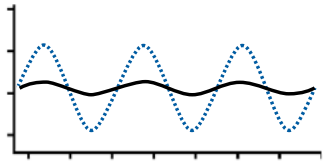

Produces smoother motion at low speeds

Command Signal Smoothing

Command Signal smoothing can soften the effect of immediate changes in velocity and direction, making the motion of the motor less jerky. An added advantage is that it can reduce the wear on mechanical components.

Improves overall system performance

Auto Setup & Self Test

At start-up the drive measures motor parameters, including the resistance and inductance, then uses this information to optimize system performance. The drive can also detect open and short circuits.

System Configuration

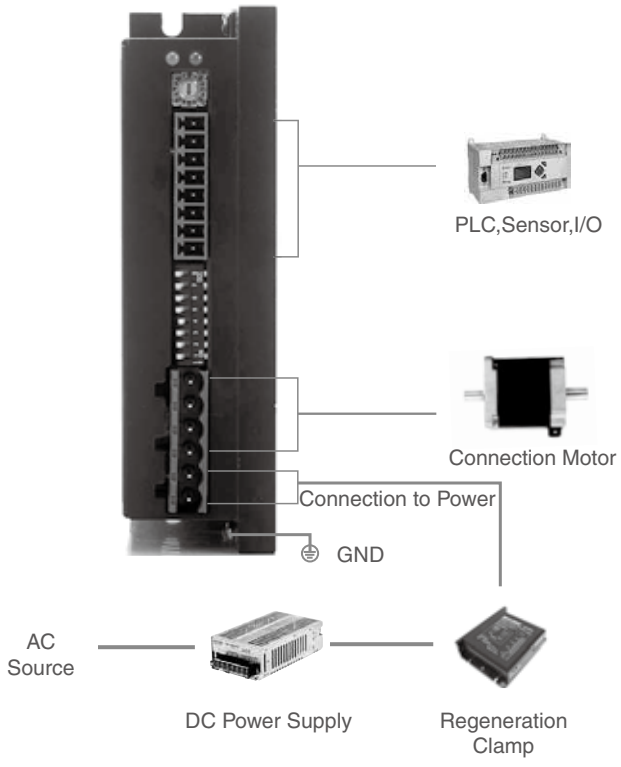

Dimensional Information

UNIT:mm

SR2–Plus

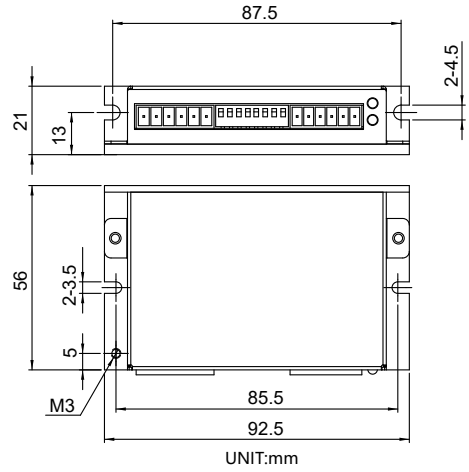

SR4/8–Plus

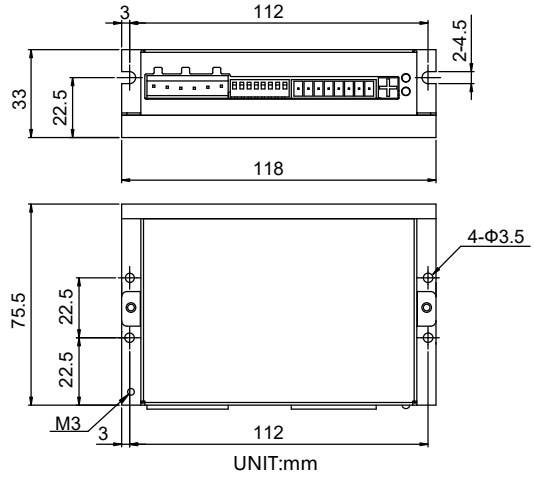

Numbering System

SR 2 - PLUS

Series	Max.Current	Blank=Standard
	2=2.2A Max.	Plus=Enhanced
	3=3.0A Max.	Mini=Compact
	4=4.5A Max.	
	8=7.8A Max.	

Ordering Information

Model	Current	Voltage	Microstep Selection	Current Selection
SR2-Plus	0.3-2.2A	12-48VDC	16	8
SR3-mini	0.4-3.0A	12-48VDC	16	8
SR4-Plus	1.0-4.5A	24-48VDC	16	8
SR8-Plus	2.4-7.8A	24-75VDC	16	8

Drive Specifications

Specification	
Speed Range	Up to 3000RPM
Operating Temperature	0 - 40C°
Ambient Humidity	90% or less(non-condensing)
Vibration Resistance	5.9m/s^2 maximum
Storage Temperature	-10 - 70C°
Heat Sinking Method	Natural cooling or fan-forced cooling
Atmosphere	Avoid dust, oily mist and corrosive air
Mass	SR2-Plus/SR3-mini: Approx. 120g
	SR4/8-Plus: Approx. 310g
Certicification	RoHS , CE (EMC): EN 61800-3:2004
Features	
Idle Current	Automatic idle current reduction to reduce heat after motor stops moving for 1 second Dip switch selectable 50% or 90%
Anti-Resonance	Raises the system-damping ratio to eliminate midrange instability and allow stable operation throughout the speed range of the motor, dip switch selectable load inertia
Control Mode	Pulse input control Step&Dir
Inupt Signal Filter	Digital filters prevent position error from electrical noise on command signals, Dip switch selectable 2MHz or 150KHz
Microstep Emulation	Switch selectable microstep emulation provides smoother, more reliable motion
Motor Database	Rotary switch easily selects from many popular motors
Self Test	Switch selectable automatic self test, while self test, drive will rotate the motor back and forth, two turns in each direction
Fault output	Optically isolated,30VDC max, 100mA max

Electrical Specifications

SR2-Plus

Parameter	Min.	Typical	Max.	UNIT
Power Supply	12	-	42	VDC
Output Current (Peak)	0.3	-	2.2	Amps
Cost current of digital input signal	6	10	15	mA
Step Frequency	2	-	2M	Hz
STEP minimum pulse width	250	-	-	ns
DIR minimum pulse width	80	-	-	us
Under Voltage Protection	-	10	-	VDC
Over Voltage Protection	-	52	-	VDC
Input Signal Voltage	4	-	28	VDC
Initialization time	-	-	2.5	S
OUT maximum output current	-	-	100	mA
OUT maximum voltage	-	-	30	VDC

SR3-mini

Parameter	Min.	Typical	Max.	UNIT
Power Supply	12	-	48	VDC
Output Current (Peak)	0.4	-	3	Amps
Cost current of digital input signal	6	10	15	mA
Step Frequency	2	-	500K	Hz
STEP minimum pulse width	1000	-	-	ns
DIR minimum pulse width	80	-	-	us
Under Voltage Protection	-	10	-	VDC
Over Voltage Protection	-	53	-	VDC
Input Signal Voltage	4	-	28	VDC
Initialization time	-	-	2.5	S

SR4-Plus

Parameter	Min.	Typical	Max.	UNIT
Power Supply	24	-	48	VDC
Output Current (Peak)	1	-	4.5	Amps
Cost current of digital input signal	6	10	15	mA
Step Frequency	2	-	2M	Hz
STEP minimum pulse width	250	-	-	ns
DIR minimum pulse width	80	-	-	us
Under Voltage Protection	-	20	-	VDC
Over Voltage Protection	-	60	-	VDC
Input Signal Voltage	4	-	28	VDC
Initialization time	-	-	2.5	S
OUT maximum output current	-	-	100	mA
OUT maximum voltage	-	-	30	VDC

SR8-Plus

Parameter	Min.	Typical	Max.	UNIT
Power Supply	24	-	75	VDC
Output Current (Peak)	2.4	-	7.8	Amps
Cost current of digital input signal	6	10	15	mA
Step Frequency	2	-	2M	Hz
STEP minimum pulse width	250	-	-	ns
DIR minimum pulse width	80	-	-	us
Under Voltage Protection	-	20	-	VDC
Over Voltage Protection	-	85	-	VDC
Input Signal Voltage	4	-	28	VDC
Initialization time	-	-	2.5	S
OUT maximum output current	-	-	100	mA
OUT maximum voltage	-	-	30	VDC

DC Input Intelligent Fieldbus Control Stepper Driver-STF Series

STF Series Drives

The STF series are high performance fieldbus control stepper drive which also integrates with built-in motion controller. The drives can be controlled by SCL, Modbus, CANopen, eSCL, EtherNet/IP or EtherCAT in real time. Motion profiles can also be programmed and stored in drives(Q Program) and then be triggered by fieldbus commands.

- Compact size
- Anti resonance
- Advanced current control
- Torque ripple smoothing

■ Feature

Host Control

- Accepts commands from host PC or PLC
- Real time control
- Multi-axes capable

CANopen 112-axis max. / Modbus SCL RS-485/422 32-axis max. / EtherCAT EtherNet/IP eSCL

Stand Alone Programmable

- Stored program execution
- Multi-tasking
- Conditional processing
- Math functions
- Data registers

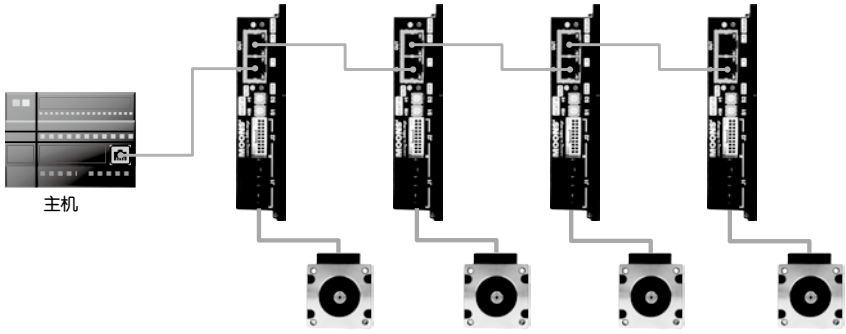

Safe & convenient

- Support communication and motor power cables disconnected protection
—— Make equipments more safer
- Support on-line configuration by fieldbus
—— Make operation more convenient

Rich and flexible I/O

- 8 Digital Inputs, 4 Digital Outputs
—— Support for more feature settings
- Dual Port RJ45 Bus Conmmunication Control
—— Support daisy chain connection

Anti-Resonance

Step motor systems have a natural tendency to resonate at certain speeds.The STF drives automatically calculate the system's natural frequency and apply damping to the control algorithm. This greatly improves midrange stability, allows higher speeds and greater torque utilization, and also improves settling times.
Provides better motor performance and higher speeds

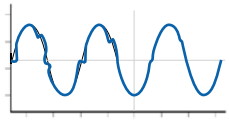

Torque Ripple Smoothing

All step motors have an inherent low speed torque ripple that can affect the motion profile of the motor. By analyzing this torque ripple the system can apply a negative harmonic to counter this effect. This gives the motor much smoother motion at low speed.
Produces smoother motion at low speed running

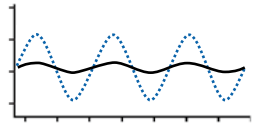

Auto Setup & Self Test

At start-up the drive measures motor parameters, including the resistance and inductance, then uses this information to optimize the system performance. The drive can also detect open and short circuits.

DC Input Intelligent Fieldbus Control Stepper Driver-STF Series

■ Numbering System

STF 05 - EC

Series
STF

Output Current(Peak)
03 = 3A
05 = 5A
06 = 6A
10 = 10A

Control Mode
R = RS-485
C = CANopen
D = Ethernet
IP = EtherNet/IP
EC = EtherCAT

■ Ordering Information

Model	Current	Voltage	RS–485	Modbus/RTU	CANopen	Q Program
STF03–R	0.1 – 3.0 A	12 – 48 VDC	√	√		√
STF05–R	0.1 – 5.0 A	24 – 48 VDC	√	√		√
STF06–R	0.1 – 6.0 A	12 – 48 VDC	√	√		√
STF10–R	0.1 – 10.0 A	24 – 70 VDC	√	√		√
STF03–C	0.1 – 3.0 A	12 – 48 VDC			√	√
STF05–C	0.1 – 5.0 A	24 – 48 VDC			√	√
STF06–C	0.1 – 6.0 A	12 – 48 VDC			√	√
STF10–C	0.1 – 10.0 A	24 – 70 VDC			√	√

Model	Current	Voltage	Ethernet	Modbus/TCP	EtherNet/IP	EtherCAT	Q Program
STF03–D	0.1 – 3.0 A	12 – 48 VDC	√	√			√
STF05–D	0.1 – 5.0 A	24 – 48 VDC	√	√			√
STF06–D	0.1 – 6.0 A	12 – 48 VDC	√	√			√
STF10–D	0.1 – 10.0 A	24 – 70 VDC	√	√			√
STF03–IP	0.1 – 3.0 A	12 – 48 VDC	√		√		√
STF05–IP	0.1 – 5.0 A	24 – 48 VDC	√		√		√
STF06–IP	0.1 – 6.0 A	12 – 48 VDC	√		√		√
STF10–IP	0.1 – 10.0 A	24 – 70 VDC	√		√		√
STF03–EC	0.1 – 3.0 A	12 – 48 VDC				√	√
STF05–EC	0.1 – 5.0 A	24 – 48 VDC				√	√
STF06–EC	0.1 – 6.0 A	12 – 48 VDC				√	√
STF10–EC	0.1 – 10.0 A	24 – 70 VDC				√	√

DC Input Intelligent Fieldbus Control Stepper Driver-STF Series

■ Drive Specifications

Power Amplifier	
Amplifier Type	Dual H-Bridge, 4 Quadrant
Current Control	PWM at 20 KHz
Output Current	STF03: 0.1 - 3.0A/phase (peak-of-sine) in 0.01 amp increments
	STF05: 0.1 - 5.0A/phase (peak-of-sine) in 0.01 amp increments
	STF06: 0.1 - 6.0A/phase (peak-of-sine) in 0.01 amp increments
	STF10: 0.1 - 10.0A/phase (peak-of-sine) in 0.01 amp increments
Input Voltage Range	STF03：12 - 48VDC
	STF05：24 - 48VDC
	STF06：12 - 48VDC
	STF10：24 - 70VDC
Maximum Input Voltage Range	STF03：11 - 53VDC
	STF05：18 - 53VDC
	STF06：11 - 53VDC
	STF10：18 - 75VDC
Protection	Over voltage, under voltage, over temp, over current, open winding, communication cable disconnection
Idle Current Reduction	Reduction range of 0 - 90% of running current after a delay selectable in milliseconds
Controller	
Anti-Resonance	Raises the system-damping ratio to eliminate midrange instability and allow stable operation throughout the speed range of the motor
Torque Ripple Smoothing	Allows for fine adjustment of phase current waveform harmonic content to reduce low-speed torque ripple in the range of 0.25 to 1.5 rps
Auto Test & Auto Setup	Auto test and setup at power on (ie. motor resistance and Inductance) to optimize your system performance.
Non-Volatile Storage	Configurations are saved in FLASH memory on-board the DSP
Operation Mode	-R Type: SCL, Q, Modbus/RTU
	-C Type: CANopen (CiA301 and CiA402 protocol). Q program can also be triggered via CANopen Command
	-D Type: eSCL, Q, Modbus/TCP
	-IP Type: EtherNet/IP, Q program also can be triggered via EtherNet/IP Command
	-EC Type: EtherCAT (CoE) with full support of CiA402, Support PP, PV, CSP&HM mode and Q mode
Digital Input	8 digital inputs
	X1, X2: Optically isolated, differential, 5-24VDC for high level voltage, minimum pulse width = 250ns, maximum pulse frequency = 2MHz
	X3, X4: Optically isolated, differential, 5-24VDC for high level voltage, minimum pulse width = 100μs, maximum pulse frequency = 5KHz
	X5 ~ X8: Optically isolated, single-ended, 5-24VDC for high level voltage, minimum pulse width = 100μs, maximum pulse frequency = 5KHz
Digital Output	4 digital outputs Y1 ~ Y4: Optically isolated, maximum voltage 30V, maximum sinking or sourcing current 100mA
Communication Port	-R Type: Dual port RS-485 (RJ45 connector)
	-C Type: Dual port CANopen (RJ45 connector) RS-232 included
	-D Type: Dual port Ethernet (RJ45 connector)
	-IP Type: Dual port Ethernet (RJ45 connector)
	-EC Type: Dual port Ethernet(RJ45 connector)and RS-232(RS-232 serial port for configuration)
Physical	
Ambient Temperature	0 - 40°C when mounted to a suitable heat sink
Humidity	90% non-condensing
Mass	STF03: 0.36kg
	STF05: 0.4kg
	STF06: 0.36kg
	STF10: 0.4kg

DC Input Intelligent Fieldbus Control Stepper Driver-STF Series

■ I/O Cable

P/N	Length (L)
1015-030	0.3m
1015-100	1m
1015-200	2m

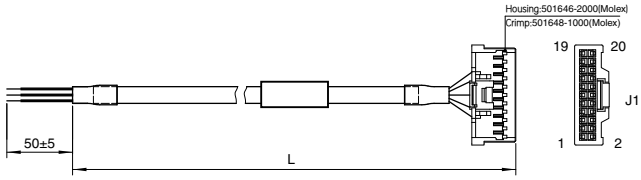

Pin No.	Assignment	Description	Color	Pin No.	Assignment	Description	Color
1	X1+	X1 Digital Input	Blue/White	11	X7	X7 Digital Input	Yellow
2	X1-		Blue/Black	12	X8	X8 Digital Input	Green
3	X2+	X2 Digital Input	Green/White	13	SHIELD	Shield	Shield
4	X2-		Green/Black	14	XCOM	X5-X8 Digital Input COM	Red
5	X3+	X3 Digital Input	Yellow/White	15	Y1	Y1 Digital Output	Brown
6	X3-		Yellow/Black	16	Y2	Y2 Digital Output	Gray
7	X4+	X4 Digital Input	Orange/White	17	Y3	Y3 Digital Output	White
8	X4-		Orange/Black	18	YCOM	Y1-Y3 Digital Output COM	Black
9	X5	X5 Digital Input	Blue	19	Y4+	Y4 Digital Output	Purple/White
10	X6	X6 Digital Input	Purple	20	Y4-		Purple/Black

■ Bus Communication Daisy Chain Cable

Common Type	Shielded Type	Length (L)
2012-030 *	2013-030	0.3m
2012-300	2013-300	3m

* 2012-030 is included in the drive package.

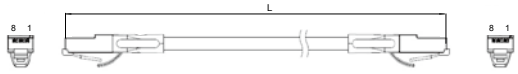

■ RC-880 Regeneration Clamp

RC-880 can clamp the regeneration and prevent the power supply and/ or drive being damaged or destroyed. Connect the RC-880 between the power supply and the drive.
Max. Supply Voltage: 80V
Max. Output Current: 8A(rms)
Continuous Power: 50W

DC Input Intelligent Fieldbus Control Stepper Driver-STF Series

■ Ordering Information

UNIT:mm

STF05/10–R, STF05/10–C

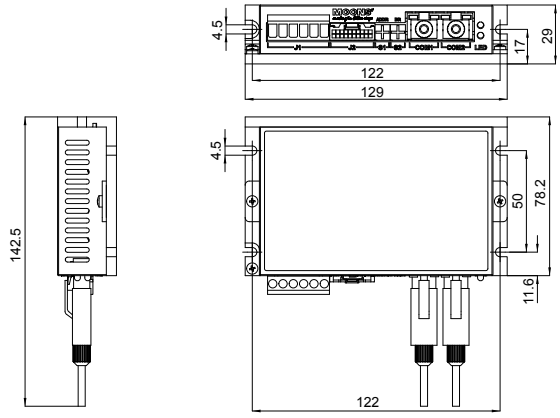

STF03/06–R, STF03/06–C

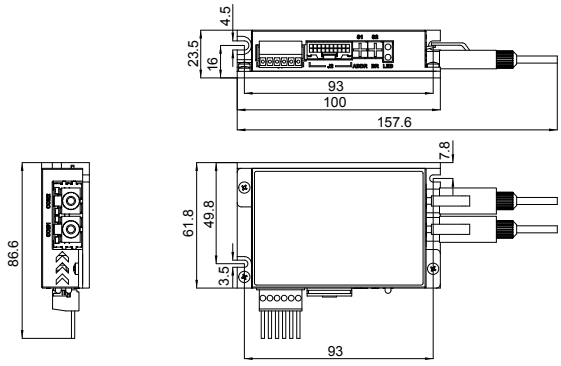

STF05/10–D, STF05/10–IP

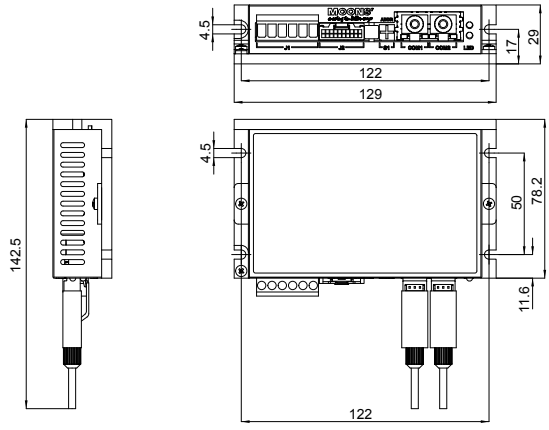

STF03/06–D, STF03/06–IP

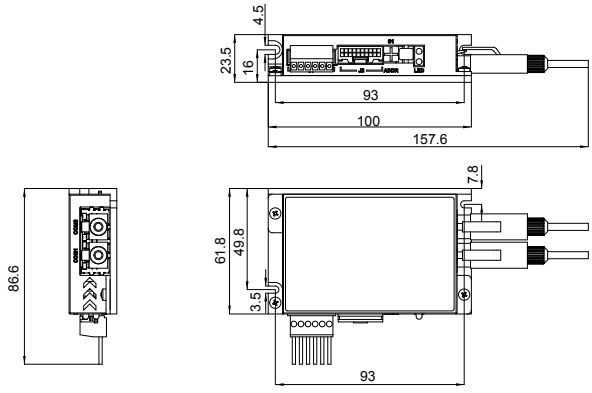

STF05/10–EC

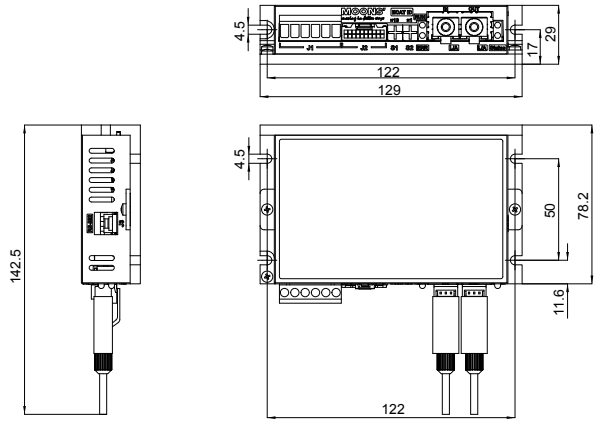

STF03/06–EC

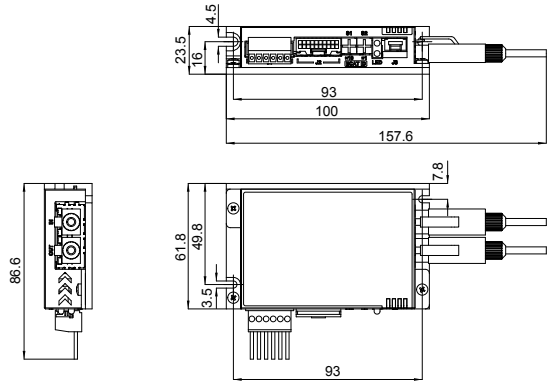

How To Get Samples Quickly

If you require a specific configuration, and wish for our engineering department to provide samples that meet your critical parameters, please fill out the application data sheet below and sent to MOONS' .

(E-mail : info@moons.com.cn)

Application info. of Linear Step Motors & Linear Slides

Customer Info.

Customer: _____ Contact Info.: _____

Project No.: _____ Telephone: _____

Project Info.

Products Category : ☐ Linear Step Motors ☐ Linear Slides ☐ Stepper Drive

Background: ☐ New Design ,Competitor: _____ ☐ Substitution Project ,Current State: _____

Quantity of samples: _____ EAU: _____ Pain: _____

Expected Delivery Time: _____ Target Price: _____ USD/EA

Design Info.

Installation: ☐ Horizontal ☐ Vertical

Driving Condition: Voltage : _____ V Current : _____ A

Thrust Force: _____ N Working Speed: _____ mm/s

Stroke: _____ mm Repeatability: ± _____ mm

Working Frequency: _____ cycles per hour, _____ hours per day.

Additional Options : ☐ Add Encoder ☐ Add Brake ☐ No additional

Environment : ☐ Indoor(Normal) ☐ Indoor(Dust-free) ☐ Medium or Heavy Dust ☐ Sticky Substance
☐ High Humidity ☐ Salt Spray ☐ High Temp. _____ ℃ ☐ Low Temp. _____℃
☐ Vacuum ☐ Others: _____

Industry

☐ Factory Automation ☐ Biochemical Analysis ☐ Medical Science ☐ 3D Printer ☐ Automatic Vending
☐ Semiconductor Mfg. ☐ Lithium Battery Mfg. ☐ Photovoltaic Mfg. ☐ Electron Mfg. ☐ Measuring Instrument
☐ Coordinate Robot ☐ Packaging Equipment ☐ Others: _____

Application Description

(Please describe your application so we can ensure the best possible solution.)

Worldwide Service Map

MOONS' Business Philosophies

• Customer satisfaction

MOONS' aims to enhance customer satisfaction through the provision development of innovative solutions, manufacture of high quality products, on-time delivery and outstanding customer support.

• Employee satisfaction

MOONS' values and respects our employees' input and encourages them to grow together with the company. We have been working to develop tools and trainings to build a thriving culture of excellence internally to support the future growth of our employees and the company.

• Partnership

MOONS' strongly believes in a true integrated partnership between all partners in business including customers, distributors and all these in supply chain. As a result of this philosophy, we endeavor to provide the best value contribution to all partners, which can help our partners improve their competiveness to achieve the win-win situation.

MOONS' Headquarter

168 Mingjia Road, Minhang District, Shanghai 201107,
P.R. China
Tel: +86 (0)21 52634688
Fax:+86 (0)21 52634098

MOONS' International Trading Company

4/F, Building 30, 69 Guiqing Road, Cao He Jin Hi-Tech
Park, Shanghai 200233, P.R. China
Tel: +86 (0)21 64952755
Fax:+86 (0)21 64951993

Domestic Offices

Shenzhen

Room 2209, 22/F, Kerry Center, 2008 Renminnan Road,
Luohu District, Shenzhen 518001, P.R. China
Tel: +86 (0)755 25472080
Fax:+86 (0)755 25472081

Beijing

Room 1206,Jing Liang Mansion, No.16 Middle Road of East
3rd Ring, Chaoyang District, Beijing 100022, P.R. China
Tel: +86 (0)10 87661889
Fax:+86 (0)10 87661880

Nanjing

Room 1101-1102, Building 2, New Town Development
Center, No.126 Tianyuan Road , Moling Street,
Jiangning District, Nanjing 211106, P.R. China
Tel: +86 (0)25 52785841
Fax:+86 (0)25 52785485

Qingdao

Room 1012, Zhuoyue Tower, No.16 Fengcheng Road,
Shibei District, Qingdao 26000, P.R. China
Tel: +86 (0)532 80969935
Fax:+86 (0)532 80919938

Wuhan

Room 3001, World Trade Tower, 686 Jiefang Avenue,
Jianghan District, Wuhan 430022, P.R. China
Tel: +86 (0)27 85448742
Fax:+86 (0)27 85448355

Chengdu

Room 1917, Western Tower, 19, 4th Section of South People
Road, Wuhou District, Chengdu 610041, P.R. China
Tel: +86 (0)28 85268102
Fax:+86 (0)28 85268103

Xi'an

Room 1006, Tower D, Wangzuo International City,
1 Tangyan Road, Xi'an 710065, P.R. China
Tel: +86 (0)29 81870400
Fax:+86 (0)29 81870340

Ningbo

Room 309, Tower B, Taifu Plaza, 565 Jiangjia Road,
Jiangdong District, Ningbo, 315040, P.R. China
Tel: +86 (0)574 87052739
Fax:+86 (0)574 87052365

Guangzhou

Room 4006, Tower B, China Shine Plaza, 9 Linhe Xi Road,
Tianhe District, Guangzhou 510610, P.R. China
Tel: +86 (0)20 38010153
Fax:+86 (0)20 38103661

North America

MOONS' INDUSTRIES (AMERICA), INC.
1113 North Prospect Avenue, Itasca, IL 60143 USA
Tel: +1 630 8335940
Fax: +1 630 8335946

MOONS' INDUSTRIES (AMERICA), INC.
Boston Office
36 Cordage Park Circle, Suite 310
Plymouth, MA 02360 USA

APPLIED MOTION PRODUCTS, INC.
404 Westridge Dr. Watsonville, CA 95076, USA
Tel: +1 831 7616555

LIN ENGINEERING, INC.
16245 Vineyard Blvd., Morgan Hill, CA 95037
Tel: +1 408 9190200
Fax:+1 408 9190201

European

MOONS' INDUSTRIES (EUROPE) S.R.L.
Via Torri Bianche n.1 20871 Vimercate(MB) Italy
Tel: +39 039 6260521
Fax: +39 039 9631409

AMP & MOONS' AUTOMATION (GERMANY) GMBH
Börsenstraße 14
60313 Frankfurt am Main Germany

South-East Asia

MOONS' INDUSTRIES (SOUTH-EAST ASIA) PTE. LTD.
33 Ubi Avenue 3 #08-23 Vertex Singapore 408868
Tel: +65 66341198
Fax: +65 66341138

Japan

MOONS' INDUSTRIES JAPAN CO., LTD.
Room 601, 6F, Shin Yokohama Koushin Building,
2-12-1, Shin-Yokohama, Kohoku-ku, Yokohama,
Kanagawa, 222-0033, Janpan
Tel: +81 (0)45 4755788
Fax: +81 (0)45 4755787

http:// www.moons.com.cn
E-mail: info@moons.com.cn
MOONS'
moving in better ways

MOONS'
moving in better ways
SHANGHAI PBC&MOONS' LINEAR TECHNOLOGY CO., LTD.

- All specifications and technical parameters of the products provided in this catalog are for reference only, and are subject to change without notice. For details, please contact our sales team.